ALTO-SHAAM® CT Classic™

ITEM NO. _____

COMBITHERM®

CTC6-10E

ELECTRIC BOILER-FREE



CAPACITY

- Six (6) full-size or GN 1/1 pans, six (6) half-size sheet pans; one row deep
- Two (2) side racks with six (6) non-tilt support rails; 13" (330mm) horizontal width between rails, 2-3/4" (70mm) vertical spacing between rails

CONSTRUCTION

- Stainless steel exterior, bright annealed interior
- Seamless welded interior stainless steel cavity
- CoolTouch3™ triple pane window door with hinged inner glass prevents additional heat loss and increases cooking efficiency
- Door is hinged right with a 130° swing
- High efficiency LED lighting integrated in the door
- Door mounted self-draining drip tray
- Hands free positive catch door handle with lighted visual alerts [PATENT PENDING]
- PROrinse™ ergonomic retractable hand shower includes a safety shutoff interlock that shuts off water to the hose [PATENT PENDING] and a built-in back flow preventer
- SafeVent™ provides automatic steam venting at the end of the cooking cycle [PATENT #7,282,674]
- Zero Clearance system maximizes floor space utilization with features that carefully protect temperature sensitive components and controls [PATENT PENDING]
- Adjustable stainless steel legs provide stability

CT CLASSIC™ STANDARD FEATURES

- Oven with state-of-the-art innovative solutions that meld together perfectly to deliver high performance standards, consistent food quality, and production efficiency.
- Classic control provides a simple and intuitive push button operation that commands all the oven functions with icons that are easy to identify.
- LED display indicates cooking mode, temperature settings, time remaining, and various instructions.
- Three cooking modes:
  Steam - 85°F to 250°F (30°C to 120°C)
  Convection - 85°F to 575°F (30°C to 300°C)
  Combination - 212°F to 575°F (100°C to 300°C)
- Cook time is displayed in hours : minutes.
- Two different fan speeds expands cooking capabilities for products affected by a high velocity of air movement.
- Cool down feature provides the operator with the ability to lower the temperature of the oven compartment at an accelerated pace.
- CombiClean® fully automated cleaning with one heavy-duty cleaning cycle.

SHORT FORM SPEC

Provide Alto-Shaam Combitherm® CT Classic™ counter-top model CTC6-10E boiler-free electric CombiOven designed with EcoSmart® technology for reduced energy and water consumption. Includes operational modes for steam, convection, and a combination of steam and convection heat. Oven is to be constructed of 18 gauge stainless steel interior cavity. Oven includes an attached retractable hand shower spray hose with safety shutoff interlock system and a back flow preventer. Classic control includes a cool-down function, automatic cleaning function, fan with two (2) fan speeds. Oven includes four (4) adjustable stainless steel legs. Each oven is to accommodate up to six (6) half-size sheet pans or six (6) full-size hotel pans (GN 1/1), include standard right-hand door hinging, six (6) non-tilt support rails, and three (3) stainless steel shelves.

FACTORY INSTALLED OPTIONS

☐ Boiler Version

Electrical Choices
- ☐ 208-240V 3ph ☐ 380-415V 3ph
- ☐ 440-480V 3ph

Door Swing
- ☐ Right-hand Door Hinging, standard
- ☐ Recessed Door, optional; increases oven width by 4" (102mm), slides out of the way for safety and frees up aisle space

☐ CombiHood PLUS™ Ventless Hood (not available on stacked combinations)

☐ Extended One-year Warranty

☐ Installation Start-Up Check - AVAILABLE THROUGH AN ALTO-SHAAM AUTHORIZED SERVICE AGENCY

Probe Choices
- ☐ Removable, single-point, quick-connect core temperature probe, optional
- ☐ Removable, single-point, quick-connect sous vide temperature probe, optional

Security Devices for correctional facility use
- ☐ Optional base package: includes tamper-proof screw package, excludes temperature probe
- ☐ Anti entrapment device, optional
- ☐ Control panel security cover, optional
- ☐ Hasp door lock (padlock not included), optional
- ☐ Removable, single-point, quick-connect core temperature probe, optional
- ☐ Seismic feet package, optional

☐ Stacking Hardware (not available with CombiHood PLUS Ventless Hood)

ALTO-SHAAM®

W164 N9221 Water Street • P.O. Box 450 • Menomonee Falls, Wisconsin 53052-0450 • U.S.A.

PHONE: 262.251.3800 800.558.8744 U.S.A./CANADA FAX: 262.251.7067 800.329.8744 U.S.A. ONLY

www.alto-shaam.com

PRINTED IN U.S.A.

DUE TO ONGOING PRODUCT IMPROVEMENT, SPECIFICATIONS ARE SUBJECT TO CHANGE WITHOUT NOTICE.

ALTO-SHAAM® CT Classic™

COMBITHERM®
CTC6-10E
ELECTRIC BOILER-FREE

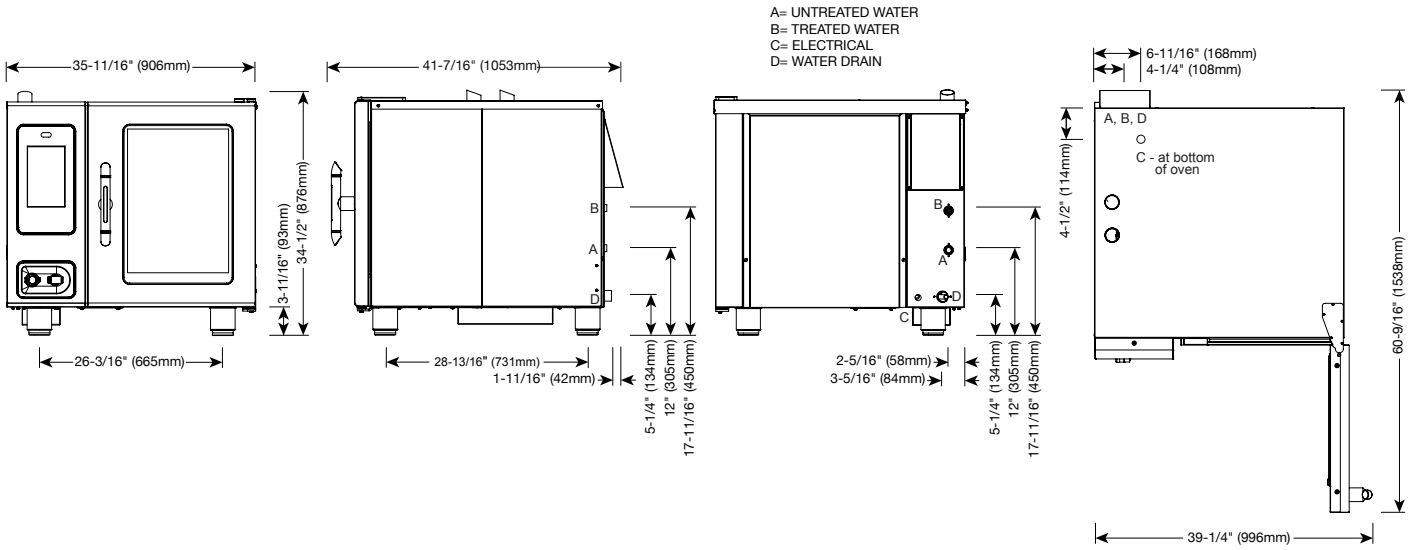

c UL us LISTED COOKING APPLIANCE 584m

ANSI/NSF 4

CE IP X5

ecosmart®

DIMENSIONS: H x W x D
EXTERIOR: 34-1/2" x 35-11/16" x 41-7/16" (876mm x 906mm x 1053mm)
EXTERIOR WITH RECESSED DOOR: 34-1/2" x 39-11/16" x 41-7/16" (876mm x 1008mm x 1053mm)
INTERIOR: 20-1/2" x 16-1/4" x 28-1/16" (520mm x 411mm x 712mm)

WATER REQUIREMENTS

TWO (2) COLD WATER INLETS - DRINKING QUALITY

ONE (1) TREATED WATER INLET: 3/4" NPT* * Can manifold off of one 3/4" line.
ONE (1) UNTREATED WATER INLET: 3/4" NPT*
LINE PRESSURE: 30 to 90 psi 2.1 to 6.3 bar
WATER DRAIN: 1-1/2" (40mm) CONNECTION WITH A 2" MINIMUM AIR GAP INSTALLED AS CLOSE TO THE OVEN AS POSSIBLE. MATERIALS MUST WITHSTAND TEMPERATURES UP TO 200°F (93°C).

CLEARANCE REQUIREMENTS

LEFT: 0" (0mm) 18" (457mm) FOR SERVICE ACCESS
RIGHT: 0" (0mm) NON-COMBUSTIBLE SURFACES 2" (51mm) COMBUSTIBLE SURFACES
TOP: 20" (508mm) FOR AIR MOVEMENT
BACK: 4" (102mm) **BOTTOM:** 5-1/8" (130mm) FOR LEGS, AIR INTAKE

INSTALLATION REQUIREMENTS

- Oven must be installed level.
- Hood installation is required.
- Water supply shut-off valve and back-flow preventer when required by local code.

WATER QUALITY STANDARDS

It is the sole responsibility of the owner/operator/purchaser of this equipment to verify that the incoming water supply is comprehensively tested and if required, a means of "water treatment" provided that would meet compliance requirements with the published water quality standards published below. Non-compliance with these minimum standards will potentially damage this equipment and/or components and VOID the original equipment manufacturer's warranty. Alto-Shaam recommends using OptiPure® [www.optipurewater.com] products to properly treat your water.

Contaminant	Inlet Water Requirements
Free Chlorine	Less than 0.1 ppm (mg/L)
Hardness	30-70 ppm
Chloride	Less than 30 ppm (mg/L)
pH	7.0 to 8.5
Silica	Less than 12 ppm (mg/L)
Total Dissolved Solids (tds)	50-125 ppm

ELECTRICAL (NO CORD, NO PLUG - DEDICATED CIRCUIT REQUIRED) DO NOT CONNECT TO A G.F.I. OUTLET

MODEL	VOLTAGE	PH	HZ	AMPS	kW	BREAKER	AWG	CONNECTION
CTC6-10E	208 – 240	3	50/60	21.9 – 25.3	7.9 – 10.5	25 - 30	8	L1, L2, L3, G
	380 – 415	3	50	13.4 – 14.6	9.0 – 10.5	16	8	L1, L2, L3, N, G
	440 – 480	3*	60	11.6 – 12.6	9.0 – 10.5	15	10 – 8	L1, L2, L3, G

*ELECTRICAL SERVICE CHARGE APPLIES

WEIGHT

NET 524 lbs est 238 kg
SHIP 574 lbs* 260 kg*

*DOMESTIC GROUND SHIPPING INFORMATION. CONTACT FACTORY FOR EXPORT WEIGHT AND DIMENSIONS.

SHIP DIMENSIONS

(L x W x H) 56" x 45" x 51"*
(1422 x 1143 x 1295mm)*

PAN CAPACITY

FULL–SIZE:	20" x 12" x 2-1/2"	Six (6)
GN 1/1:	530 x 325 x 65mm	Six (6)
*HALF–SIZE SHEET:	18" x 13" x 1"	Six (6)

*ON WIRE SHELVES ONLY

PRODUCT MAXIMUM: 72 lb (33 kg)
VOLUME MAXIMUM: 45 quarts (57 liters)
*ADDITIONAL WIRE SHELVES REQUIRED FOR MAXIMUM CAPACITY

DUE TO ONGOING PRODUCT IMPROVEMENT, SPECIFICATIONS ARE SUBJECT TO CHANGE WITHOUT NOTICE.