Electrolux

Planetary Mixers
Planetary Mixer for Bakery, 40 lt. - Electronic

ITEM #

MODEL #

NAME #

SIS #

AIA #



Planetary Mixers

Planetary Mixer for Bakery, 40 lt. - Electronic

600275 (MBE40B3) * NOT TRANSLATED *

600276 (MBE40B) * NOT TRANSLATED *

Main Features

- Professional beater mixer designed to withstand the strong demands of bakery and pastry making.
- Delivered with:
  - Spiral Hook, Paddle, Reinforced Whisk and Mixing Bowl for 40 lt
- Kneading speed: "1" with hook.
- Mixing speed: "2" with paddle.
- Emulsifying speed: "3" with whisk.
- Wire safety screen fitted with a removable chute to add products while working, thus ensuring operator safety.
- Pivoting and removable wire safety screen for easier and better cleaning.
- Raising and lowering of the bowl controlled by lever with an automatic locking of the bowl when in the raised position.
- Waterproof touch button control panel with timer, speed setting and display.
- Safety device will automatically stop the machine when the bowl is lowered.
- Maximum capacity (flour, with 60% of hydration) 10 kg.
- Solid BPA-free safety screen, covering the stainless steel wire one, limits the flour and unsafe dust particles when used in bakery and pastry preparation.
- Bowl detection device allows the mixer to switch on only when the bowl and the solid safety screen are properly installed and positioned together.

Construction

- Reinforced body, feet and transmission for heavy duty operations.
- 302 AISI Stainless steel bowl - 40 lt. capacity.
- Electronic speed variator (10 speeds available from 30 to 175 rpm)
- 3 fixed speeds: 40, 80 and 160 rpm.
- Water protected planetary system (IP55 electrical controls, IP23 overall machine).
- Power: 2200 watts.
- Asynchronous motor with high start-up torque.
- The solid safety screen and the stainless steel wire structure are both removable and dismantled for cleaning and are dishwasher safe.
- Adjustable feet to perfect stability.

Included Accessories

- 1 of BOWL FOR 40LT MIXER PNC 650128
- 1 of Additional Spiral Hook 40 lt for MB/MBE models PNC 653092
- 1 of Additional Paddle 40 lt for MB/MBE models PNC 653093
- 1 of Additional Whisk 40 lt, reinforced (for heavy duty use) for MB/MBE planetary mixers PNC 653127

Optional Accessories

- 20L BOWL,HOOK,PADDLE,WHISK FOR 40L MIXER PNC 650126 ❑

APPROVAL:

- BOWL FOR 40LT MIXER PNC 650128 ❑
- Additional Spiral Hook 40 lt for MB/MBE models PNC 653092 ❑
- Additional Paddle 40 lt for MB/MBE models PNC 653093 ❑
- Fine Whisk 40 lt for MB/MBE planetary mixers (for emulsions) PNC 653094 ❑
- Additional Whisk 40 lt, reinforced (for heavy duty use) for MB/MBE planetary mixers PNC 653127 ❑
- Bowl trolley for 40/60/80 lt planetary mixers (cannot be used with wheel kit 653552) PNC 653585 ❑

The company reserves the right to make modifications to the products without prior notice. All information correct at time of printing.

2016.03.30

Planetary Mixers
Planetary Mixer for Bakery, 40 lt. - Electronic

Front

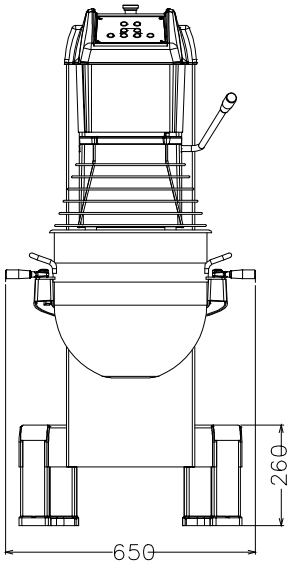

Top

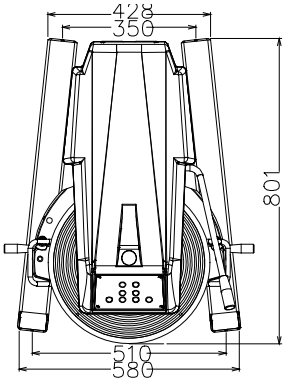

EI = Electrical connection

Side

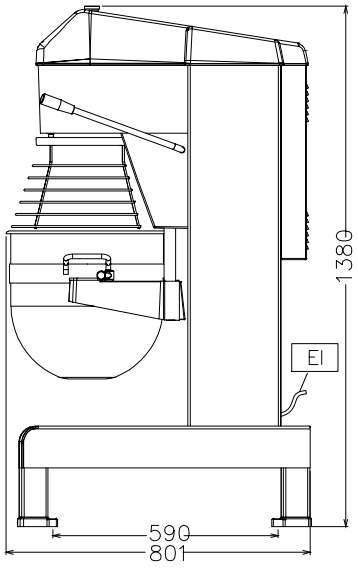

Electric

Supply voltage:	
600275 (MBE40B3)	380-440 V/3 ph/50/60 Hz
600276 (MBE40B)	200-240 V/1N ph/50/60 Hz
Electrical power, max:	2.2 kW
Total Watts:	2.2 kW

Capacity:

Performance (up to):	10 - kg/Cycle
Capacity:	40 Litre

Key Information:

External dimensions, Height:	1370 mm
External dimensions, Width:	655 mm
External dimensions, Depth:	850 mm
Shipping weight:	195 kg
Net weight (kg):	10 kg with Spiral hook
Egg whites:	70 with Whisk

The company reserves the right to make modifications to the products without prior notice. All information correct at time of printing.

2016.03.30