Varimixer

RN20

Table model

INTUITIVE CONTROL PANEL The control panel is logically structured, with the option to adjust the speed variably, or choose between four fixed speeds or four programs with their own saved work processes. Operation time can be managed using a digital timer.



RUNS ON 230 VOLTS
The RN series can be connected to a normal power outlet.

ATTACHMENT DRIVE The RN series is also available with an attachment drive for meat mincers and vegetable slicers.

EFFECTIVE TOOLS
In addition to a wire whip, beater and dough hook, a scraper with a nylon blade is available for the RN20, which ensures that the bowl sides are scraped effectively and all ingredients are utilised. This creates larger volume and reduces time spent.

SAFETY GUARD The RN20 comes with a fixed clear plastic safety guard as standard with integrated filling schute.

STAINLESS STEEL The RN series mixers are made of easy-to-clean corrosion-resistant stainless steel with a strong frame and legs. The bowl, wire whip, beater, dough hook and scraper are also made of stainless steel and are dishwasher-safe.

VARIMIXER RN20 OPTIONS – MODELS



Table model, stainless steel



Marine version, stainless steel

OPTIONS – SAFETY GUARDS



Standard safety guard plastic.
CE-certified



Removable safety guard plastic.
CE-certified

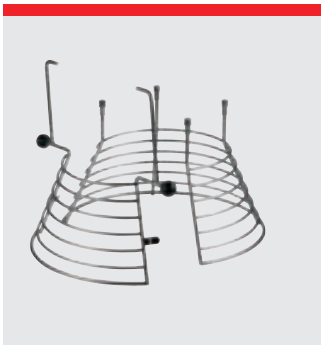

Fixed safety guard grid.
Not CE-certified



Removable safety guard grid.
Not CE-certified

OPTION - ATTACHMENT DRIVE

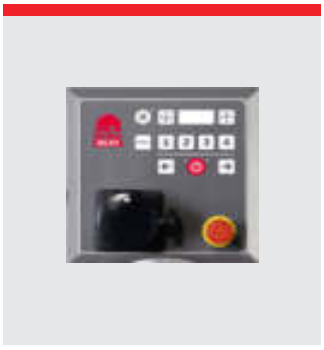

Attachment drive for meat
mincer and vegetable cutter



Meat mincer, 70 mm



Meat mincer, 82 mm



Vegetable cutter GR20

VARIMIXER RN20 STANDARD TOOLS – A-EQUIPMENT 20L



Hook, whip, beater and bowl 20 L in stainless steel.

VARIMIXER RN20 TOOLS – B-EQUIPMENT 20/12L



Hook, whip, beater and bowl 20/**12** L in stainless steel.

ACCESSORIES - TOOLS



Whip with thinner wires, stainless steel.



Whip with thicker wires, stainless steel.



Wing whip, stainless steel.



Powder mixer in stainless steel.



Automatic scraper in stainless steel. Nylon or teflon blade. 20L and 20/12L.



Stainless steel table.



Tool rack, 91 cm.

VARIMIXER RN20 STANDARD

Stainless steel
1 bowl 20 liter in stainless steel
1 beater in stainless steel
1 hook in stainless steel
1 whip in stainless steel
Fixed safety guard plastic – CE-certified
Digital timer and emergency stop
Voltage: 1 ph, 230V, 50-60 Hz. 1.200 W

VARIMIXER RN20 STANDARD TECHNICAL DATA

Volume	20	l
Effect	1.200	W
Voltage*	230	V
Net weight table model	82	kg
H x W x L table model	885x450x667	mm
Variable speed	98 – 375	RPM
Phases	1	ph
IP code	IP32	

*Other voltage power supply are available upon request in the range of 100 to 480 V.
All standard and marine mixers are available in 50 and 60 Hz.

VARIMIXER RN20 MARINE VERSION

Water cover at air ventilation, slottet free screws. Built in transformer. Complies with USPHS.

Voltage: 2 ph, 400V, 50-60 Hz with 0 and ground. 1.200 W
2 ph, 440V, 50-60 Hz with 0 and ground. 1.200 W
2 ph, 480V, 50-60 Hz with 0 and ground. 1.200 W

CAPACITIES

Egg Whites	2.4 l
Whipped cream	5.0 l
Mayonnaise	16 l
Herb butter	10 kg
Mashed potatoes	12 kg
Bread dough (50% AR)	10 kg
Bread dough (60% AR)	11 kg
Ciabatta dough (70% AR)	12 kg
Muffins	14 kg
Layer cake base	5.0 kg
Meatball mix	15 kg
Icing	14 kg
Doughnut (50% AR)	12.5 kg

DIMENSIONS

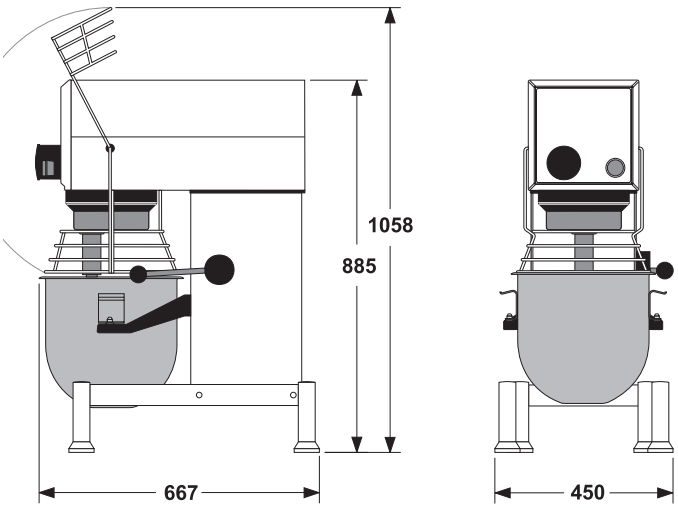

CERTIFICATIONS

Varimixer

A/S Wodschow & Co
Kirkebjerg Søpark 6
DK-2605 Brøndby
P: +45 4344 2288
E: info@varimixer.com
www.varimixer.com