Varimixer

RN10

Table model

INTUITIVE CONTROL PANEL The control panel is logically structured, with the option to adjust the speed variably, or choose between four fixed speeds or four programs with their own saved work processes. Operation time can be managed using a digital timer.

ATTACHMENT DRIVE The RN series is also available with an attachment drive for meat mincers and vegetable slicers.



RUNS ON 230 VOLTS
The RN series can be connected to a normal power outlet.

SAFETY SCREEN The RN10 comes with a patented transparent magnetic detachable safety screen.

EFFECTIVE TOOLS
In addition to a wire whip, beater and dough hook, a scraper with a nylon blade is also included with the RN10, which ensures that the bowl sides are scraped effectively and all ingredients are utilised. This creates larger volume and reduces time spent.

STAINLESS STEEL The RN series mixers are made of easy-to-clean corrosion-resistant stainless steel with a strong frame and legs. The bowl, wire whip, beater, dough hook and scraper are also made of stainless steel and are dishwasher-safe.

VARIMIXER RN10 OPTIONS – MODELS



Table model, stainless steel



Marine version, table model

VARIMIXER RN10 STANDARD TOOLS – A-EQUIPMENT 10L

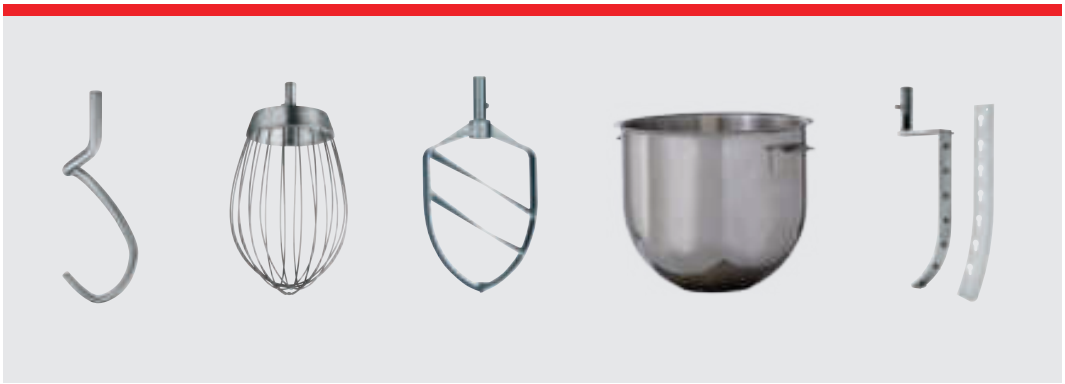

Hook, whip, beater, scraper and bowl 10 L in stainless steel.
Scraper with nylon or teflon blade.

SAFETY GUARD



Removable magnetic safety guard. CE-certified

OPTION - ATTACHMENT DRIVE



Attachment drive for meat mincer and vegetable cutter



Meat mincer, 70 mm



Vegetable cutter GR10

ACCESSORIES - TOOLS



Tool rack, 91 cm



Stainless steel table for RN10

VARIMIXER RN10 STANDARD

Stainless steel
1 bowl 10 liter in stainless steel
1 beater in stainless steel
1 hook in stainless steel
1 whip in stainless steel
1 automatic bowl scraper complete
1 removable magnetic safety guard - CE certified
Digital timer and emergency stop
Voltage: 1 ph, 230V, 50-60 Hz with 0 and ground. 700 W

VARIMIXER RN10 STANDARD TECHNICAL DATA

Volume	10	l
Effect	700	W
Standard voltage*	220-240	V
Net weight table model	51	kg
H x W x L table model	639x369x545	mm
Variable speed	110 – 420	RPM
Phases	1	ph
IP code	IP32	

*Other voltage power supply are available upon request in the range of 100 to 480 V.
All standard and marine mixers are available in 50 and 60 Hz.

VARIMIXER RN10 MARINE VERSION

Water cover at air ventilation, slottet free screws. Built in transformer. Complies with USPHS.

Voltage: 2 ph, 400V, 50-60 Hz with 0 and ground. 700 W
2 ph, 440V, 50-60 Hz with 0 and ground. 700 W
2 ph, 480V, 50-60 Hz with 0 and ground. 700 W

CAPACITIES

Egg whites	1.0 l
Whipped cream	2.5 l
Mayonnaise	8.0 l
Herb butter	5.0 kg
Mashed potatoes	3.5 kg
Bread dough (50% AR)	5.0 kg
Bread dough (60% AR)	6.0 kg
Ciabatta dough (70% AR)	5.5 kg
Muffins	6.5 kg
Layer cake base	2.5 kg
Meatball mix	7.0 kg
Icing	5.8 kg
Doughnut (50% AR)	6.0 kg

DIMENSIONS

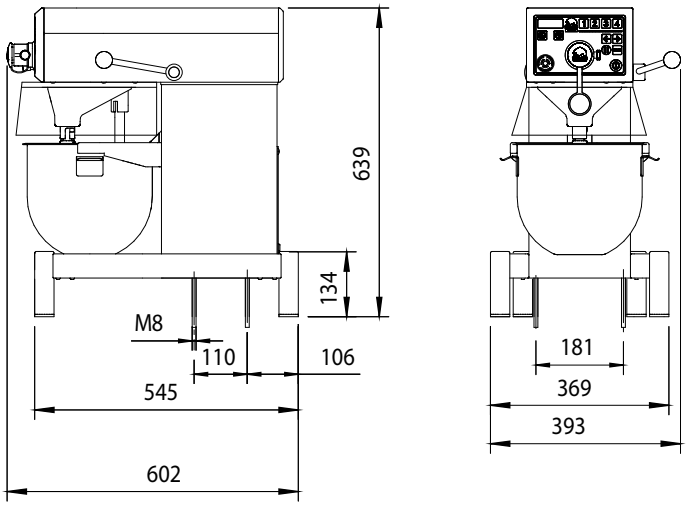

CERTIFICATIONS

CE

Varimixer

A/S Wodschow & Co
Kirkebjerg Søpark 6
DK-2605 Brøndby
P: +45 4344 2288
E: info@varimixer.com
www.varimixer.com