Varimixer

AR60

STRONG AND EFFECTIVE The powerful motors have the capacity to handle large quantities of heavy ingredients.

VARIABLE SPEED CONTROL The speed is variably controlled by a very rugged system of belts, rather than gears. This solution means that the mixer does not contain oil, thus avoiding the risk of oil spilling into the bowl.

MULTIPLE CAPACITIES IN ONE MACHINE Bowls and tools for production at half volume are available for AR60.

DIGITAL TIMER operation time can be controlled or monitored via a digital timer. The machine stops at 00:00



MEAT MINCER AND VEGETABLE CUTTER Models from AR30 to AR80 can be ordered with an attachment drive, to expand the mixer's potential applications.

PLASTIC OR STAINLESS STEEL SAFETY GUARD The AR series comes with a CE-approved safety guard made of plastic, to prevent flour dust and stains. It's filling chute can be used during operation. It is also available with a removable plastic guard, or a fixed or detachable stainless steel guard.

AUTOMATIC FIXATION The bowl is wheeled into place between the two bowl arms. Using the handle – or automatically by pressing a button – the bowl is raised, centered and locked in place in a single movement.

EASY BOWL HANDLING Choose between bowl trolley for transport or an electric bowl lift, which handles transport to and from the machine. This also ensures good ergonomics during filling and emptying. Choose between several models.

WHITE OR STAINLESS STEEL An easy-to-clean design. The AR series is powder coated as standard and can be upgraded to a completely stainless steel frame.

PIZZA SPECIAL AR40 and AR60 are available in a special pizza version with an extra powerful motor that can easily handle 32 and 46 kg pizza dough, respectively, with 50 per cent dry matter.

VARIMIXER AR60 OPTIONS – MODELS



White, powder coated



Stainless steel



Pizza version, white, powder coated



Marine version, stainless steel

OPTIONS – CONTROL PANEL



VL-1 – Manual speed regulation and manual bowl lowering



VL-1S – Automatic speed regulation and automatic bowl lowering

OPTIONS – SAFETY GUARDS



Fixed safety guard in plastic. CE-certified



Removable safety guard in plastic. CE-certified



Fixed safety guard in stainless steel. Not CE-certified



Removable safety guard in stainless steel. Not CE-certified

OPTIONS – ATTACHMENT DRIVE



Attachment drive for mean mincer and vegetable cutter



Meat mincer, 70 mm



Meat mincer, 82 mm



Vegetable cutter GR20

VARIMIXER AR60 STANDARD TOOLS – A-EQUIPMENT 60L

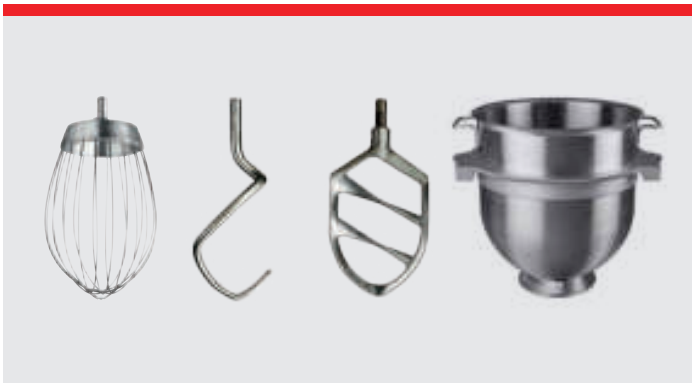

Whip, hook, beater and bowl 60 liter in stainless steel.

VARIMIXER AR60 STANDARD TOOLS – B-EQUIPMENT 60/30L



Whip, hook, beater and bowl 60/**30** liter in stainless steel.

OPTION – TOOLS



Wing whip, stainless steel



Whip with 1 mm thicker wires, stainless steel



Whip with thinner wires, stainless steel



Double pinned hook for pizza



Automatic scraper, stainless steel. Nylon or teflon blade. 60L and 60/30L.



Powder mixer, stainless steel



Whip with reinforcement



Tool rack, 127 cm

EQUIPMENT



Ring gas burner. Natural or liquid gas.



Bowl truck



Easylift 60 II



Flexlift Inox

VARIMIXER AR60 STANDARD
White powder coated
1 bowl 60 liter in stainless steel
1 beater in stainless steel
1 hook in stainless steel
1 whip with stainless steel wires
Fixed safety guard in plastic – CE-certified
Digital timer and emergency stop
Voltage: 3 ph, 400V, 50 Hz with 0 and ground. 1.850 W

VARIMIXER AR60 STANDARD TECHNICAL DATA		
Volume	60	l
Effect	1.850	W
Effect, pizza version	3.000	W
Standard voltage*	400	V
Net weight	275	kg
H x W x L	1413x648x1028	mm
Variable speed	53 – 288	RPM
Phases	3	ph
IP code	IP32	

*Other voltage power supply are available upon request in the range of 100 to 480 V.
All standard and marine mixers are available in 50 and 60 Hz.

VARIMIXER AR60 MARINE VERSION
Stainless steel execution, water cover at air ventilation, slottet free screws, full welded stainless steel knees, gasket at the rear plate, gasket at front panel and top cover. Complies with USPHS.
Voltage: 3 ph, 440V, 50-60 Hz with 0 and ground. 1.850 W 3 ph, 480V, 50-60 Hz with 0 and ground. 1.850 W

CAPACITIES	AR60	AR60P
Egg Whites	9.0	9.0 l
Whipped cream	15	15 l
Mayonnaise	48	48 l
Herb butter	45	45 kg
Mashed potatoes	36	36 kg
Bread dough (50% AR)	34	46 kg
Bread dough (60% AR)	44	56 kg
Ciabatta dough (70% AR)	40	50 kg
Muffins	33	33 kg
Layer cake base	15	15 kg
Meatball mix	45	45 kg
Icing	40	40 kg
Doughnut (50% AR)	36	54 kg

DIMENSIONS

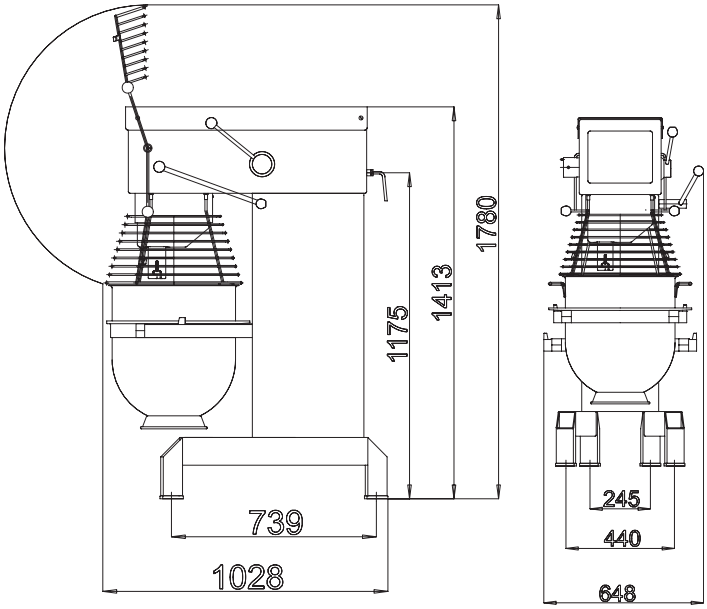

CERTIFICATIONS

Varimixer

A/S Wodschow & Co
Kirkebjerg Søpark 6
DK-2605 Brøndby
P: +45 4344 2288
E: info@varimixer.com
www.varimixer.com