Scotsman®
Ice Systems

NU 300

Other models in this range
NU 100 - NU 150 - NU 220

Self Contained Ice Machine up to 135 kg





Proximity condensor air filter



Front ON-OFF Switch
Foutine Maintenance Alarm



Hygienic scoop holder
Easy bin access



It is 1003 mm in height with legs



Advanced PC board with One touch cleaning and indicator lights

Features

- Produces Medium cubes or Small cubes.
- Up to 135 kg (298 lb) daily ice cubes production.
- Up to 37 kg (81 lb) ice storage capacity.
- Resistant stainless steel exterior.
- Front panel in & out airflow for built-in installation.
- High grade appearance.
- Easily accessible front panel mount ON-OFF Switch.
- Ergonomically designed ice-storage access, with disappearing door.
- Routine Maintenance visible alarm light on front panel.
- It is easy for water system cleaning with One Touch cleaning button. (The SCOTSMAN cleaner is sold separately)
- Front access condenser air filter, removable and washable.
- CFC- free R-404A refrigerant.

NU 300 Technologies

Energy Saving · Water Purity System · Total Hygiene Concept · Build-in Facility · Clean me! · ON OFF

Model		24h Production 21°C : 10°C [kg]	[lb]	32°C : 21°C [kg]	[lb]	Storage capacity [kg]	[lb]
NU 300AS	Air cooled	132	290	100	220	37	81
NUH 300AS	Air cooled	132	290	100	220	37	81
NU 300WS	Water cooled	n/a	n/a	n/a	n/a	n/a	n/a
NUH 300WS	Water cooled	n/a	n/a	n/a	n/a	n/a	n/a

W D H

[WxDxH mm]
650x690x1003

[WxDxH inches]
26″ x 27″ x 40″

[V/Hz/ph]
220/50/1

R 404A

MEDIUM CUBE
10g



22×22×22mm

SMALL CUBE
5g



9,5×22×22 mm

This product qualifies for the following listings:

CE

Certified ISO 9001

www.scotsman-ice.it
www.scotsman-china.com

10/2016

Scotsman®
Ice Systems

NU 300

Other models in this range
NU 100 - NU 150 - NU 220

Self Contained Ice Machine up to 135 kg

The model with legs

Front view

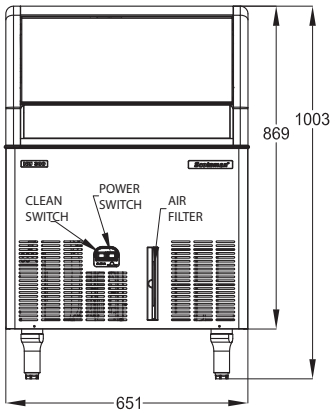

Side view

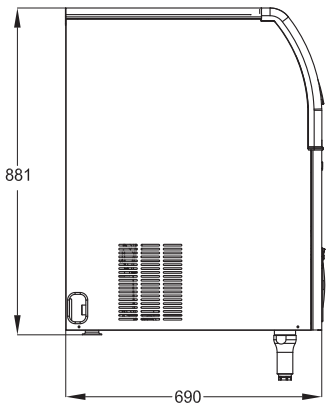

Back view

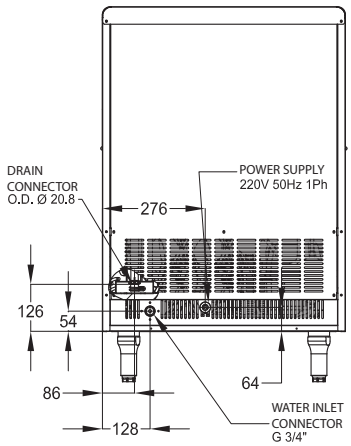

NU 300 Air cooled

Inlet water temperature

Air temperature °C / °F	50° F / 10° C	60° F / 15° C	70° F / 21° C	90° F / 32° C	
10° C	142	--	--	--	kg
50° F	313	--	--	--	lb
21° C	132	--	--	--	kg
70° F	290	--	--	--	lb
32° C	--	--	100	--	kg
90° F	--	--	220	--	lb
38° C	--	--	--	85	kg
100 F	--	--	--	187	lb

24 h

	Minimum	Maximum
	10°C (50°F)	40°C (104°F)
	5°C (41°F)	35°C (95°F)
V	-10%	+10%
	1 bar 14 psi	5 bar 70 psi

		[Btu/h]	[W]	[Ømm 2]	[W]	FUSE	[kWh] - 100 lb	[L] - 100 lb	[kg]	[lb]	[kg]	[lb]
NU 300 AS		8530	2500	1,5	950	16A	19,8	165	65	143	70	154
NUH 300 AS		8530	2500	1,5	950	16A	19,8	165	65	143	70	154
NU 100 WS		n/a	n/a	n/a	n/a	n/a	n/a	n/a	n/a	n/a	n/a	n/a
NUH 100 WS		n/a	n/a	n/a	n/a	n/a	n/a	n/a	n/a	n/a	n/a	n/a

IMPORTANT NOTICE:
Models and specifications are subject to change without notice.
This spec sheet is meant for commercial purpose only.
For technical documentation please refer to our service manuals.

www.scotsman-ice.it
www.scotsman-china.com

Scotsman®
Ice Systems

Milano Madrid Chicago Dubai Singapore Shanghai Johannesburg

10/2016