Scotsman
Ice Systems

ES4050

Other models in this range:
ES1014 - ES2040
Compact versions:
EC10 - EC15 - EC25 - EC30 - EC40 - EC50

Subcooled Scale Ice Machine
Vertical Evaporator - 4000 / 5000 Kg in 24h













ES4050 with B4600
(sold separately)



ES4050 with ITS3250
(sold separately)

Features

- Evaporator: cylinder made of AISI304 stainless steel, insulation made by polyurethane foam; external finishing in stainless steel; drip-tray in ABS food-proof
- Cover in stainless steel
- Base in alluminium alloy (Peralluman)
- Rotating shaft made of stainless steel with IGLIDUR bush
- Ice scraper made of stainless steel with self-lubricating stainless steel bearings
- Drive motor with direct connection with gear reducer
- Three phase water pump; Water level sensor on water distributor (to be connected to level contactor)
- Floating valve for water supply; Overflow connection on the base; Drip pan in ABS plastic
- Thermostatic expansion valve with external pressure regulation
- Salt dosing pump

• Accessories included, to be installed on site:

- Mechanical filter - on water pipe supply
- Drive motor ammetric protection for electrical panel

Electrical control board (accessory QEES204002600):

- Epoxy painted box IP54
- Power switch
- Emergency push button
- Working and Alarm lightings
- Transformer for contactors
- Power contactors with thermal protections
- Timers for drive motor, water pump, water level sensor and compressor pump-down
- Water level relays
- Drive motor ammetric protection
- Inverter for drive motor supply
- Terminal board for electrical connections

	24h (-9°C) / 25°C 77°F / 15°C 60°F	D W H [WxDxH mm]
	1,8-2,2 mm	1100x1100x1480
	[kg] [lbs]	[WxDxH inches]
ES 4050	4000 / 5000 8800 / 11000	43 5/16" x 43 5/16" x 58 1/4"

[v/Hz/ph]
400/50/3+N

R 404 A
R 507



Residual water content 2%

Ice scales are the coldest form of ice. Formed at -5° to -9°Celsius, they are very dry, containing less than 2% residual water. Scales look like fragments of glass, have an irregular shape and a thickness that can be adjusted from 1,2 to 2,0 mm.

This product qualifies for the following listings:

CE

2 Years Warranty
Subject to certain limitations and exclusions

Certified ISO 9001

www.scotsman-ice.it
www.scotsman-ice.com

Models and specifications are subject to change without notice.

6/2016

Scotsman
Ice Systems

ES4050

Other models in this range:
ES1014 - ES2040
Compact versions:
EC10 - EC15 - EC25 - EC30 - EC40 - EC50

Subcooled Scale Ice Machine
Vertical Evaporator - 4000 / 5000 Kg in 24h

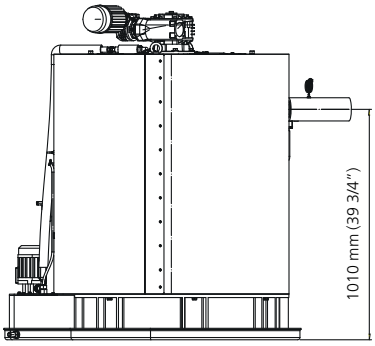

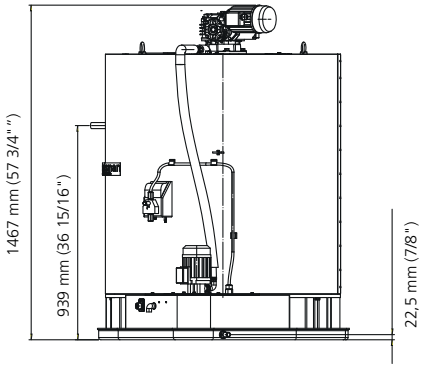

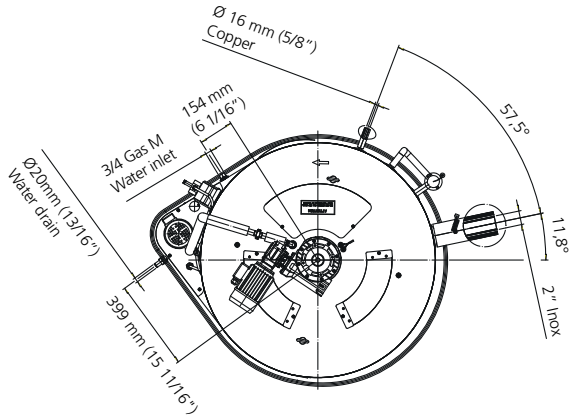

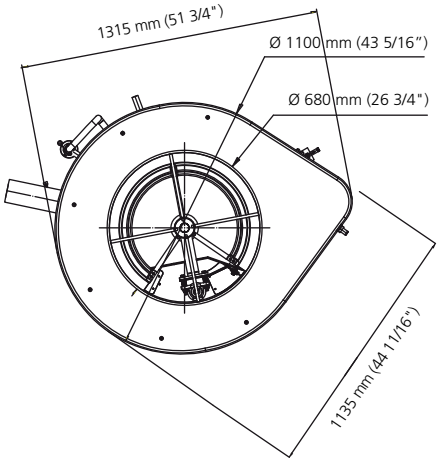

Clearence for maintenance

Around cylinder minimum	300 mm
Above drive motor minimum	400 mm
Above ice scraper minimum	950 mm

Technical features	**5000 Kg**
Electrical Power: KW / A	Pump 0,35 / 0,95 Drive motor 0,18 / 0,62
Extraction rate: W	30.000
Evap.Temperature: °C	-28
Volume refrigeration system	69
Max pressure PS (Dir. 97/23/CE)	17,50 bar
Category PED (Dir. 97/23/CE)	III
Refrigerant charge Kg	35

	Minimum	Maximum
	5°C (50°F)	43°C (104°F)
	5°C (41°F)	30°C (95°F)
	-10%	+10%
	1 BAR 14 psi	5 BAR 70 psi

	[V/Hz/ph]	[W]	[A]	[kg]	[lbs]	[kg]	[lbs]	[shipping size mm]
ES4050		0,55W		630	1386	680	1496	1550x1280x16800 - (3,33 m³)

Water supply type: fresh

IMPORTANT NOTICE:
Models and specifications are subject to change without notice.
This spec sheet is meant for commercial purpose only.
For technical documentation please refer to our service manuals.

www.scotsman-ice.it
www.scotsman-ice.com

Scotsman
Ice Systems