# Scotsman
Ice Systems

# ES2040

Other models in this range:
ES1014 - ES4050
Compact versions:
EC10 - EC15 - EC25 - EC30 - EC40 - EC50

## Subcooled Scale Ice Machine -Vertical Evaporator 2000 / 3000 / 4000 Kg in 24h












ES2040 with UBH1600
(sold separately)





ES2040 with UBH2250
(sold separately)



ES2040 with B3200
(sold separately)



ES2040 with B4600
(sold separately)



ES2040 with SIS1350
(sold separately)



ES2040 with ITS2250
(sold separately)



ES2040 with ITS3250
(sold separately)

This product qualifies for the following listings:

CE

## Features

- Evaporator: cylinder made of AISI304 stainless steel, insulation made by polyurethane foam; external finishing in stainless steel; drip-tray in ABS food-proof.
- Cover in stainless steel.
- Base in alluminium alloy (Peralluman).
- Rotating shaft made of stainless steel with IGLIDUR bush.
- Ice scraper made of stainless steel with self-lubricating stainless steel bearings.
- Drive motor with direct connection with gear reducer.
- Three phase water pump; Water level sensor on water distributor (to be connected to level contactor).
- Floating valve for water supply; Overflow connection on the base; Drip pan in ABS plastic.
- Thermostatic expansion valve with external pressure regulation.
- Salt dosing pump.

### Accessories included, to be installed on site:

- Mechanical filter - on water pipe supply
- Drive motor ammetric protection for electrical panel

### Electrical control board (accessory QEES204002600):

- Epoxy painted box IP54
- Power switch
- Emergency push button
- Working and Alarm lightings
- Trasformer for contactors
- Power contactors with thermal protections
- Timers for drive motor, water pump, water level sensor and compressor pump-down
- Water level relais
- Drive motor ammetric protection
- Inverter for drive motor supply
- Terminal board for electrical connections

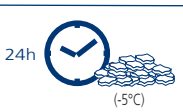


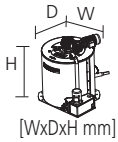


| | 1,8-2,2 mm | | 1,8-2,2 mm | | 1,2-1,6 mm | |
|---|---|---|---|---|---|---|
| | [kg] | [lbs] | [kg] | [lbs] | [kg] | [lbs] |
| ES 2040 | 2000 | 4400 | 3000 | 6600 | 4000 | 8800 |

[WxDxH mm]
970x790x1400

[WxDxH inches]
38 3/16" x 38 3/16" x 55 1/8"

[v/Hz/ph]
400/50/3+N



R 404 A
R 507



Residual water content 2%

Ice scales are the coldest form of ice. Formed at -5° to -9°Celsius, they are very dry, containing less than 2% residual water. Scales look like fragments of glass, have an irregular shape and a thickness that can be adjusted from 1,2 to 2,0 mm.

**2 Years Warranty**
Subject to certain limitations and exclusions

Certified ISO 9001

www.scotsman-ice.it
www.scotsman-ice.com

Models and specifications are subject to change without notice.

6/2016

# Scotsman
Ice Systems

# ES2040

Other models in this range:
ES1014 - ES4050
Compact versions:
EC10 - EC15 - EC25 - EC30 - EC40 - EC50

## Subcooled Scale Ice Machine -Vertical Evaporator 2000 / 3000 / 4000 Kg in 24h

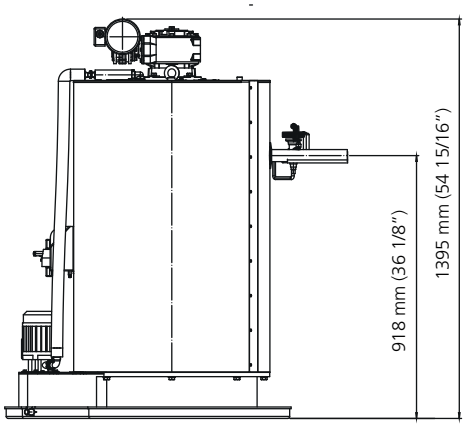


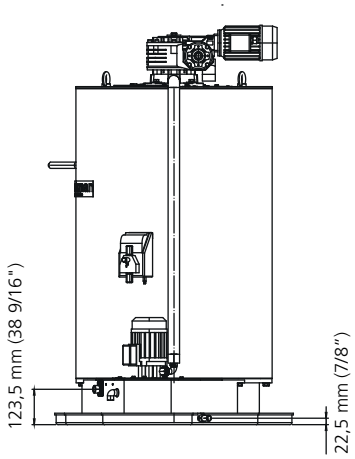


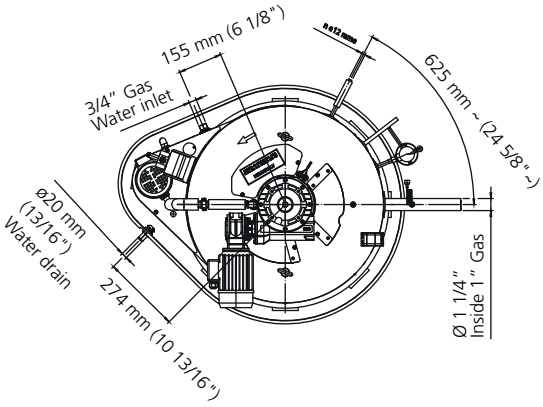


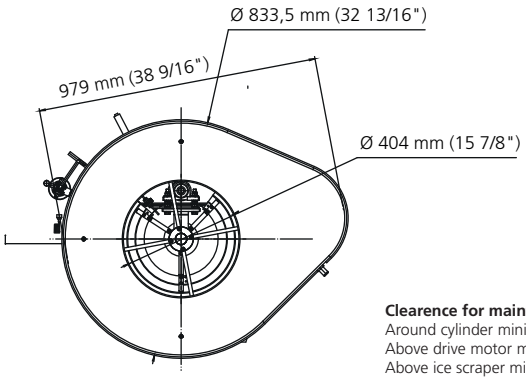


**Clearence for maintenance**

| | |
|---|---|
| Around cylinder minimum | 300 mm |
| Above drive motor minimum | 400 mm |
| Above ice scraper minimum | 720 mm |

| **Technical features** | **2000 Kg** | **3000 Kg** | **4000 Kg** |
|---|---|---|---|
| Electrical Power: KW / A | Pump 0,35 / 0,95<br>Drive motor 0,18 / 0,62 | | |
| Extraction rate: W | 12.000 | 18.000 | 21.500 |
| Evap.Temperature: °C | -26 | -28 | -28 |
| Volume refrigeration system | 30 | | |
| Max pressure PS (Dir. 97/23/CE) | 17,50 bar | | |
| Category PED (Dir. 97/23/CE) | II | | |
| Refrigerant charge Kg | 30 | | |

| | Minimum | Maximum |
|---|---|---|
| | 5°C (50°F) | 43°C (104°F) |
| | 5°C (41°F) | 30°C (95°F) |
| | -10% | +10% |
| | 1 BAR<br>14 psi | 5 BAR<br>70 psi |

| | [V/Hz/ph] | [W] | [A] | [kg] | [lbs] | [kg] | [lbs] | [shipping size mm] |
|---|---|---|---|---|---|---|---|---|
| ES2040 | | 0,55W | | 300 | 660 | 350 | 770 | 1250x1050x1510 - (1,98 m³) |

Water supply type: fresh

IMPORTANT NOTICE:
Models and specifications are subject to change without notice.
This spec sheet is meant for commercial purpose only.
For technical documentation please refer to our service manuals.

**www.scotsman-ice.it**
**www.scotsman-ice.com**

Scotsman
Ice Systems