Scotsman
Ice Systems

ES1014

Other models in this range:
ES2040 - ES4050
Compact versions:
EC10 - EC15 - EC25 - EC30 - EC40 - EC50

Subcooled Scale Ice Machine
Vertical Evaporator 1000 / 1400 Kg in 24h












ES1014 with RBC STAND
(sold separately)


ES1014 with UBH1600
(sold separately)


ES1014 with UBH2250
(sold separately)


ES1014 with B3200
(sold separately)


ES1014 with SIS1350
(sold separately)

This product qualifies for the following listings:

CE

Features

- Evaporator: cylinder made of AISI304 stainless steel, insulation made by polyurethane foam; external finishing in stainless steel; drip-tray in ABS food-proof
- Cover in stainless steel
- Water distributor in ABS food proof
- Rotating shaft made of stainless steel with with base self-lubricating stainless steel bearing
- Ice scraper made of stainless steel with self-lubricating stainless steel bearings
- Drive motor with direct connection with gear reducer
- Three phase water pump; Water level sensor on water distributor (to be connected to level contactor)
- Floating valve for water supply; Overflow connection on the base; Drip pan in ABS plastic
- Accessories included, to be installed on site:
- Filtrer/Softner – on water pipe supply
- Drive motor ammetric protection for electrical panel
- Automatic expansion valve with external pressure regulation

Electrical control board with safety devices (Accessory QEES101402600):

- Plastic box
- Contactor for water and salt dosing pumps
- Inverter for drive motor supply
- Alarm lightings
- Emergency push button
- Water level relais
- Drive motor ammetric protection
- Start & Stop timers
- Relais for electrical supply to solenoid valve (command for compressor or central cooling system)

	24h (-5°C) / 25°C 77°F / 15°C 60°F				D W H [WxDxH mm] 750x620x840
	1,6 mm		1,6 mm		
	[kg]	[lbs]	[kg]	[lbs]	[WxDxH inches] 29 1/2" x 24 7/16" x 33 1/16"
ES 1014	1000	2200	1400	3080	

[v/Hz/ph] 400/50/3+N

R 404 A
R 507


Residual water content 2%

Ice scales are the coldest form of ice. Formed at -5° to -9°Celsius, they are very dry, containing less than 2% residual water. Scales look like fragments of glass, have an irregular shape and a thickness that can be adjusted from 1,2 to 2,0 mm.

2 Years Warranty
Subject to certain limitations and exclusions

Certified ISO 9001

www.scotsman-ice.it
www.scotsman-ice.com

Models and specifications are subject to change without notice.

6/2016

Scotsman
Ice Systems

ES1014

Other models in this range:
ES2040 - ES4050
Compact versions:
EC10 - EC15 - EC25 - EC30 - EC40 - EC50

Subcooled Scale Ice Machine
Vertical Evaporator 1000 / 1400 Kg in 24h

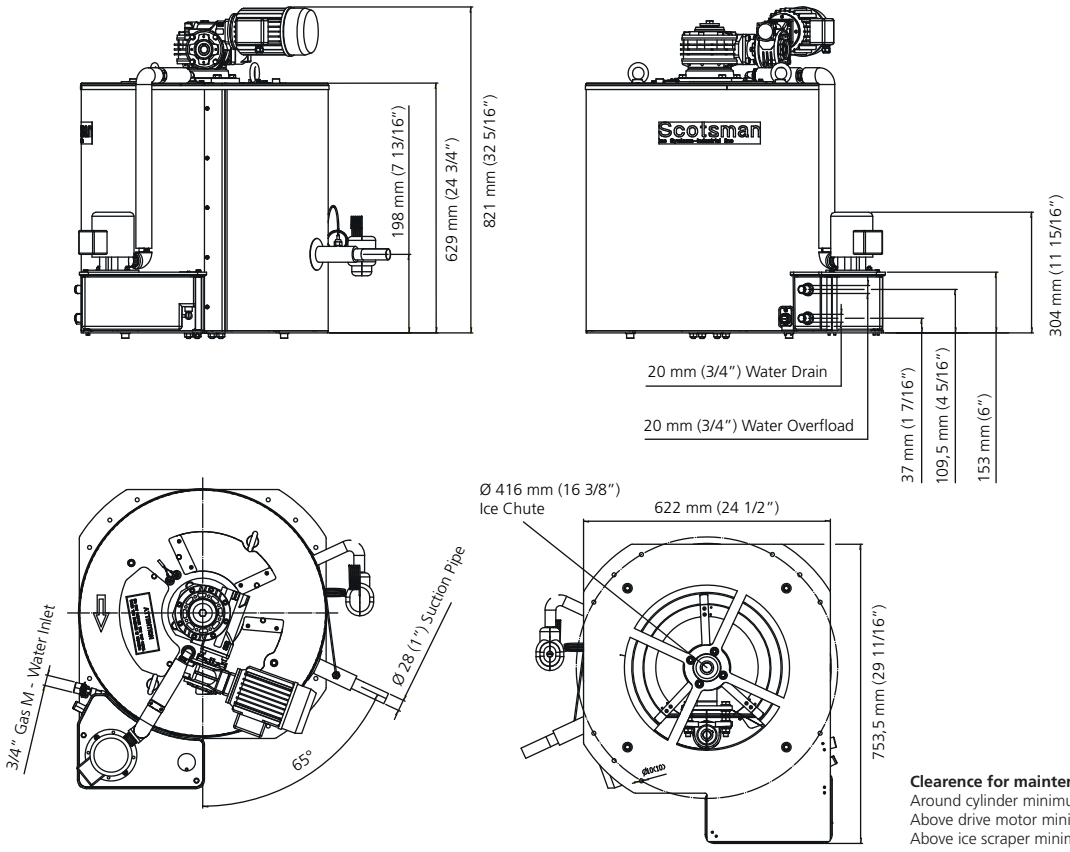

Clearence for maintenance

Around cylinder minimum	300 mm
Above drive motor minimum	400 mm
Above ice scraper minimum	450 mm

Technical features	**1000 Kg**	**1400 Kg**
Electrical Power: KW / A	Pump 0,06 / 0,10 Drive motor 0,18 / 0,62	
Extraction rate: W	5.000	7.000
Evap.Temperature: °C	-22	-28
Volume refrigeration system	1,10	
Max pressure PS (Dir. 97/23/CE)	19 bar	
Category PED (Dir. 97/23/CE)	Escluding Art.3 §3	
Refrigerant charge Kg	1,32	

	Minimum	Maximum
Ambient temperature	5°C (50°F)	43°C (104°F)
Water temperature	5°C (41°F)	30°C (95°F)
Voltage variation	-10%	+10%
Water supply pressure	1 BAR 14 psi	5 BAR 70 psi

	[V/Hz/ph]	[W]	[A]	[kg]	[lbs]	[kg]	[lbs]	[shipping size mm]
ES1014	400/50/3+N	0,30	0,80	104	229	130	286	1005x949x1055 - (1,0 m³)

Water supply type: fresh

IMPORTANT NOTICE:
Models and specifications are subject to change without notice.
This spec sheet is meant for commercial purpose only.
For technical documentation please refer to our service manuals.

www.scotsman-ice.it
www.scotsman-ice.com

Scotsman
Ice Systems