Scotsman®
Ice Systems

ESSENTIAL ICE

CU 0715

Other models in this range:
CU 0415 - CU 0920

Cube Ice Machines up to 32 kg



Features

Reliability
Corrosion resistant exterior
Ease of Use
Slide back door allows easy access to ice in the bin
Intuitive control panel allows for quick and easy operation
Ice scoop included
Compact Design
Only 15" wide, the ice maker can be placed in the tightest locations
Optional floor mount kit allows for installation under 34" ADA counter tops
High Production
Produces up to 32 kg per day and stores 16 kg, meeting the ice demands for many different applications.
Quality Ice
Unique evaporator produces crystal clear cubes.
Environmentally Friendly
Low energy consumption.
Non-ozone depleting R134a refrigerant.

Intuitive Controls



Clear Cube Evaporator Technology



Technologies

Total Hygiene Concept · Energy Saving · Water Purity System · agion

	+C° -C°	24h								
		21°C : 10°C			32°C : 21°C					
		[kg]	[lb]	N° *	[kg]	[lb]	N° *	[kg]	[lb]	N° *
CU 715 MA		32	70	3200	25	56	2500	16	36	1600

*Estimate number of cubes.

[V/Hz/ph]
220-240/50/1

R134a

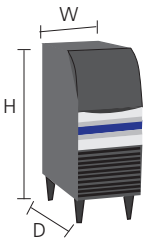

[WxDxH mm]
381 x 610 x 954

[WxDxH inches]
15"x 24"x 38"

This product qualifies for the following listings:

CE NSF



10 g

Medium Cube
22 x 22 x 22 mm
7/8"x 7/8"x 7/8"

Large and slowmelting ice form, ideal for beverages.

2 Years Warranty
Subject to certain limitations and exclusions

Certified ISO 9001:2008

www.scotsman-ice.it
www.scotsman-ice.com

9/2016

Scotsman
Ice Systems

ESSENTIAL ICE

CU 0715

Other models in this range:
CU 0415 - CU 0920

Cube Ice Machines up to 32 kg

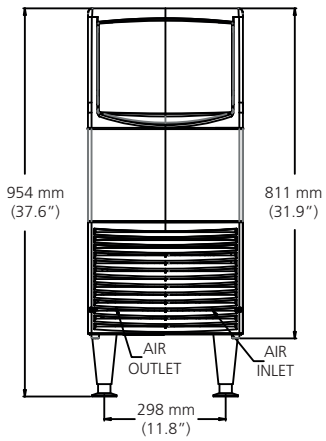

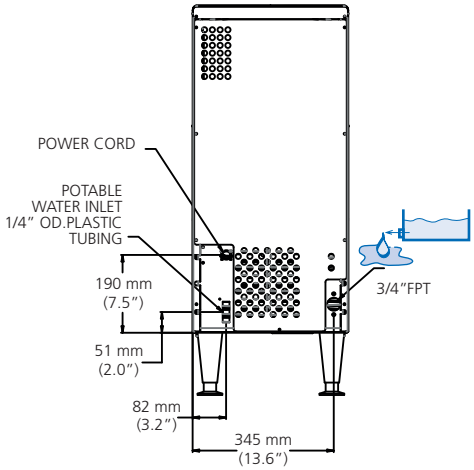

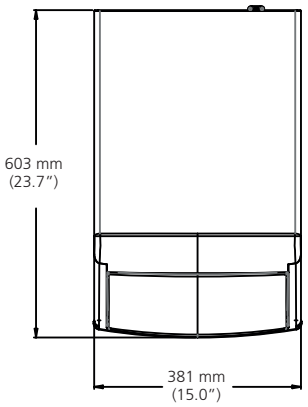

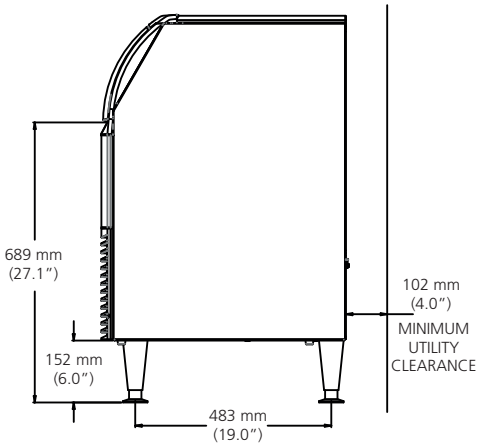

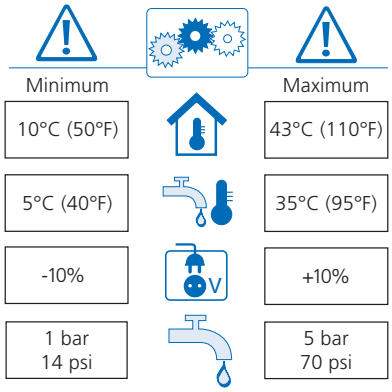

	+C° -C°	[Btu/h]	[W]	[Ømm²]	[W]	FUSE	[kWh] - 100 kg	[l/h]	32°C 90°F 21°C 70°F [gal/h]	[kg]	[lb]
CU 0715 MA		1900	570	3 x 1,5	275	15 A	13	2,7	0,7	46	102

IMPORTANT NOTICE:
Models and specifications are subject to change without notice.
This spec sheet is meant for commercial purpose only.
For technical documentation please refer to our service manuals.

www.scotsman-ice.it
www.scotsman-ice.com

Scotsman
Ice Systems

Milano Madrid Chicago Dubai Singapore Shanghai Johannesburg

9/2016