# IM-240ANE (-23) / IM-240AWNE CUBE ICE MAKER

## Product Description

The IM-240ANE (-23) (air cooled) and the IM-240AWNE (water cooled) are modular cube ice maker. These products produce up to 240kg per 24 hours and can be used in combination with all available bins.

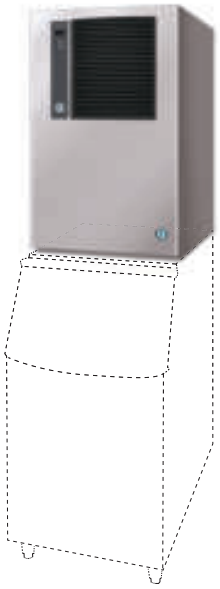

- A closed water circuit offers the ultimate contamination protection, by reducing the number of points at which impurities can enter the ice making process.
- Hoshizaki ice makers are micro computer controlled, controlling the ice making process to perform at its best under varying circumstances, without having to make physical adjustments.
- A stainless steel exterior provides a hygienic and high quality finish.
- Foam injected polyurethane for insulation (HFC free), helps preserve the quality and consistency of the ice produced, reducing the number of production cycles.
- An easily cleanable air filter allows end users to carry out a routine cleaning schedule, extending product life expectancy and reducing the frequency and costs of maintenance call-outs.

### Available Models

| |
|---|
| IM-240ANE (Air Cooled) |
| IM-240ANE-23 (Air Cooled) |
| IM-240AWNE (Water Cooled) |
| IM-240ANE-21 (Air Cooled) |
| IM-240AWNE-23 (Water Cooled) |
| IM-240AWNE-21 (Water Cooled) |

### Ice Cubes

| Model | Size | Shape |
|---|---|---|
| IM-240ANE | Cube Approx. 28 x 28 x 32 mm |  |
| IM-240ANE-23 | Cube Approx. 28 x 28 x 23 mm | |
| IM-240AWNE | Cube Approx. 28 x 28 x 32 mm | |

### Bins

| Model | Type of Bin | Max. Bin Capacity |
|---|---|---|
| B-301SA | Modular | 144 kg |
| B-501SA, Top Kit TK 8 D | | 217 kg |
| B-801SA, Top Kit TK 8 D + TK 18 D | | 348 kg |

### Production

| Model | Ice Production per 24h (Dimple Size) | Temperature | Ice Production per Cycle | Water Consumption per 24h |
|---|---|---|---|---|
| IM-240ANE | Approx. 220 (5mm) / 240 (15mm) kg<br>Approx. 205 (5mm) / 230 (15mm) kg<br>Approx. 160 (5mm) / 190 (15mm) kg | AT.10°C, WT.10°C<br>AT.21°C, WT.15°C<br>AT.32°C, WT.21°C | Approx. 3,2kg/140pcs | Approx. 0,73m³<br>Approx. 0,36m³<br>Approx. 0,28m³ |
| IM-240ANE-23 | Approx. 180 (5mm) / 225 (15mm) kg<br>Approx. 175 (5mm) / 215 (15mm) kg<br>Approx. 165 (5mm) / 195 (15mm) kg | AT.10°C, WT.10°C<br>AT.21°C, WT.15°C<br>AT.32°C, WT.21°C | Approx. 2,38kg/140pcs | Approx. 0,80m³<br>Approx. 0,40m³<br>Approx. 0,38m³ |
| IM-240AWNE | Approx. 230 (5mm) / 240kg (15mm)<br>Approx. 215 (5mm) / 225kg (15mm)<br>Approx. 205 (5mm) / 215kg (15mm) | AT.10°C, WT.10°C<br>AT.21°C, WT.15°C<br>AT.32°C, WT.21°C | Approx. 3,2kg/140pcs | Approx. 0,76m³<br>Approx. 0,37m³<br>Approx. 0,36m³ |

### Two year warranty

For more information visit our website at www.hoshizaki-europe.com
Hoshizaki Europe B.V. retains the right to change products and their specifications without prior notice.

# IM-240ANE (-23) / IM-240AWNE CUBE ICE MAKER

IM-240ANE

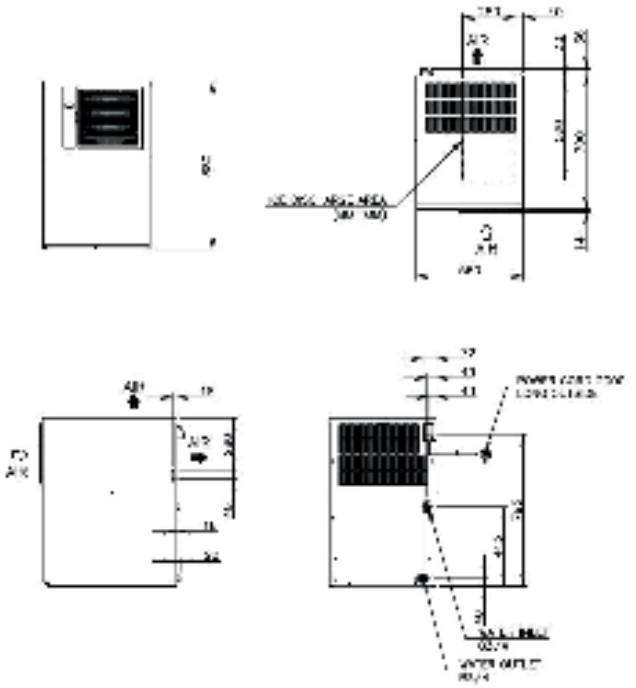

IM-240AWNE

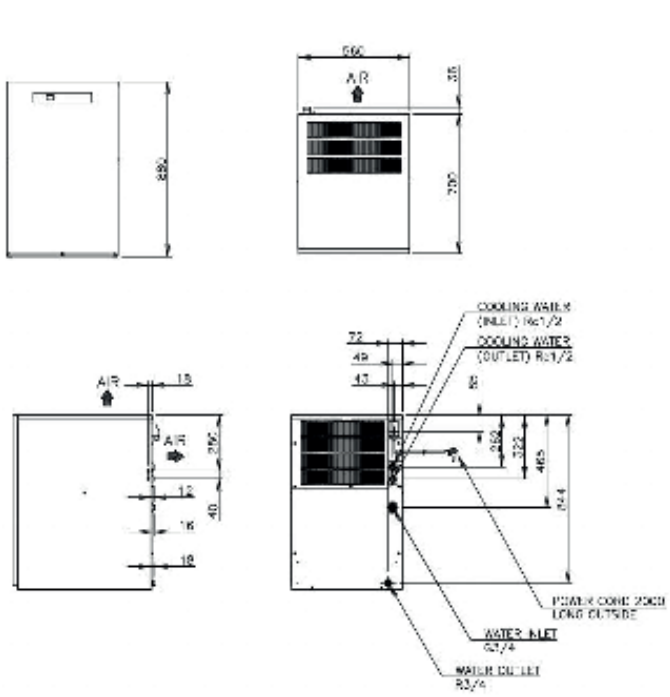

| Specification | IM-240ANE | IM-240ANE-23 | IM-240AWNE |
|---|---|---|---|
| **Ac Supply Voltage** | 1 PHASE 220-240V 50Hz | 1 PHASE 220-240V 50Hz | 1 PHASE 220-240V 50Hz |
| **Amperage** (AT.32˚C, WT.21˚C) | 6.6A | 6.6A | 6.3A |
| **Starting Amperage** | 31A | 35A | 35A |
| **Electric Consumption** (AT.32˚C, WT.21˚C) | 1320W | 1320W | 1300W |
| **Freeze Cycle Time** (AT.21˚C, WT.15˚C) | Approx. 20min | Approx. 17min | Approx. 19min |
| **Exterior** | Stainless Steel | Stainless Steel, Galvanized Steel (Rear) | Stainless Steel |
| **Insulation Foam Blowing Agent** | Water Blown | Water Blown | Water Blown |
| **Connections-Electric** | X-Type Con. | X-Type Con. | X-Type Con. |
| **Connections-Water Supply** | Inlet 3/4" (connected at rear side) | Inlet 3/4" (connected at rear side) | Inlet 3/4" (connected at rear side) |
| **Connections-Drain** | Outlet 3/4" (connected at rear side) | Outlet 3/4" (connected at rear side) | Outlet 3/4" (connected at rear side) |
| **Ice Making System** | Closed Cell System | Closed Cell System | Closed Cell System |
| **Harvesting System** | Hot Gas Defrost | Hot Gas Defrost | Hot Gas Defrost |
| **Condenser** | Air-cooled, Fin and Tube type | Air-cooled, Fin and Tube type | Water-Cooled, Tube in Tube type |
| **Heat Rejection** (AT.32˚C, WT.21˚C) | 2870W (2365kcal/h) | 2870W (2365kcal/h) | - |
| **Evaporator** | Copper Tube on Sheet and Cells | Copper Tube on Sheet and Cells | Tin-plated Copper Tube on Sheet and Cells |
| **Refrigerant Control** | Thermostatic Expansion Valve | Thermostatic Expansion Valve | Thermostatic Expansion Valve |
| **Refrigerant Charge** | R404A 480 g | R404A 480 g | R404A |
| **Bin Control System** | Microswitch with Time Delay | Microswitch with Time Delay | Microswitch with Time Delay |
| **Ice Making Control System** | Thermistor, Timer | Thermistor, Timer | Thermistor, Timer |
| **Electrical Protection** | Class I Appliance, 5A Fuse | Class I Appliance, 5A Fuse | Class I Appliance, 5A Fuse |
| **Compressor Protection** | Auto-reset Overload Protector | Auto-reset Overload Protector | Auto-reset Overload Protector |
| **Ice Maker Protection** | Interlock by Controller Board | Interlock by Controller Board | Interlock by Controller Board |
| **Dimensions Product excl. Packaging** | 560 x 700 x 880 (W x D x H, mm) | 560 x 700 x 880 (W x D x H, mm) | 560 x 700 x 880 (W x D x H, mm) |
| **Dimensions Product incl. Packaging** | 680 x 820 x 1065 (W x D x H, mm) | 680 x 820 x 1065 (W x D x H, mm) | 680 x 820 x 1065 (W x D x H, mm) |
| **Weight Gross / Net** | 91 kg / 80 kg | 91 kg / 80 kg | 94 kg / 83 kg |

| Operation Conditions | |
|---|---|
| **Ambient Temperature** | 1 - 40˚C |
| **Water Supply Temperature** | 5 - 35˚C |
| **Water Supply Pressure** | 0,7-7,8 bar (0,07-0,78MPa) |
| **Voltage Range** | Rated Voltage ± 6% |

| Accessories |
|---|
| Scoop |
| Installation Kit |
| Ice Chute |


For more information please contact your local sales office:

Hoshizaki Belgium: info@hoshizaki.be
Hoshizaki Deutschland: info@hoshizaki.de
Hoshizaki France: info@hoshizaki.fr
Hoshizaki Iberia: info@hoshizaki.es
Hoshizaki Middle East: sales@hoshizaki.ae

Hoshizaki Nederland: sales@hoshizaki.nl
Hoshizaki United Kingdom: uksales@hoshizaki.co.uk
Other countries: sales@hoshizaki.nl

www.hoshizaki-europe.com