HOSHIZAKI

FM-170AKE (SB) FLAKE ICE MAKER / FM-170AKE-N (SB) NUGGET ICE MAKER

Product Description

The FM-170AKE (-N) is a modular ice maker which produces either Flake or Nugget Ice. Flake and Nugget Ice are popular for a variety of cooling purposes, including the display of fish and fresh produce as well as in the medical world for cooling blood and organs. This ice is often used to prepare cocktails and drinks because of the quickness of cooling and limited dilution of drinks.



- Hoshizaki ice makers are micro computer controlled, controlling the ice making process to perform at its best under varying circumstances, without having to make physical adjustments.
- The characteristics of the ice produced by Hoshizaki ice makers means that 'freeze-burn' is no longer an issue when displaying fresh fish or produce.
- Quality stainless steel auger and evaporator increase the life expectancy of these components and the whole ice maker, as well as reducing costly maintenance visits.
- An easily cleanable air filter allows end users to carry out a routine cleaning schedule, extending product life expectancy and reducing the frequency and costs of maintenance call-outs.
- Due to the auger system the water consumption is equal to the ice production.

Available Models

FM-170AKE (Air cooled)
FM-170AKE-N (Air cooled)

Ice

Model	Shape
FM-170AKE	Flake
FM-170AKE-N	Nugget

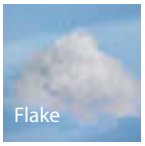

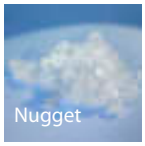

Bins

Model	Type of Bin	Max. Bin Capacity
B-301SA	Modular	144 kg
B-501SA, Top Kit TK 8 D		217 kg
B-801SA, Top Kit TK 8 D + TK 18 D		348 kg

Production

Model	Ice Production per 24h	Temperature	Water Consumption per 24h
FM-170AKE	Approx. 170kg Approx. 145kg Approx. 120kg	AT.10°C, WT.10°C AT.21°C, WT.15°C AT.32°C, WT.21°C	Approx. 0,17m³ Approx. 0,15m³ Approx. 0,12m³
FM-170AKE-N	Approx. 160kg Approx. 135kg Approx. 110kg	AT.10°C, WT.10°C AT.21°C, WT.15°C AT.32°C, WT.21°C	Approx. 0,16m³ Approx. 0,14m³ Approx. 0,11m³

Two year warranty

For more information visit our website at www.hoshizaki-europe.com
Hoshizaki Europe B.V. retains the right to change products and their specifications without prior notice.

WRAS APPROVED PRODUCT

HACCP INTERNATIONAL FOOD SAFETY PROGRAMME CERTIFICATION

CE

ISO HOSHIZAKI • ISO 9001

FM-170AKE (SB) FLAKE ICE MAKER / FM-170AKE-N NUGGET ICE MAKER

FM-170AKE

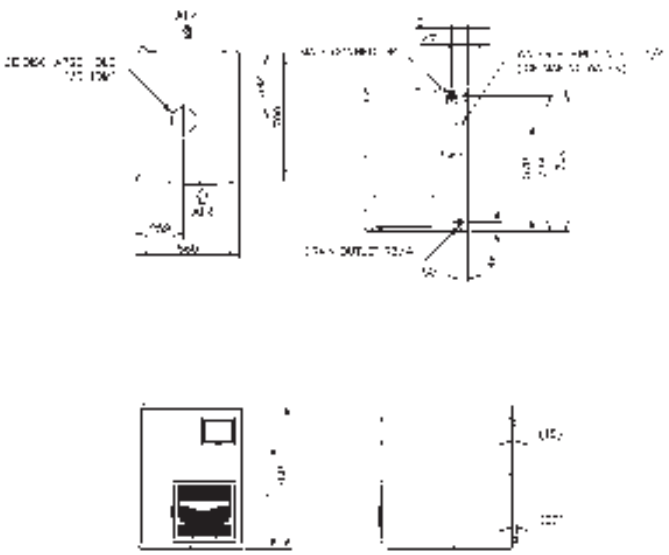

FM-170AKE-N

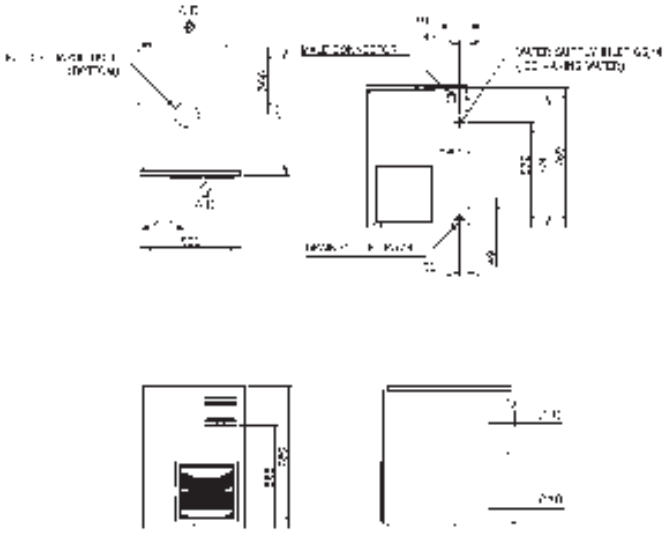

Specification	FM-170AKE	FM-170AKE-N
Power Supply	1 Phase 220-240/220-230V 50/60Hz Capacity: 1.62/1.19kVA (6.8/5.2A)	1 Phase 220-240/220-230V 50/60Hz Capacity: 1.62/1.19kVA (6.8/5.2A)
Amperage (AT.32˚C, WT.21˚C)	3.9/3.5A Starting: 19A	3.9/3.5A Starting: 19A
Electric Consumption	600/675W (Power Factor: 66/83%)	620/695W (Power Factor: 69/86%)
Connections - Water Supply	Direct Connection to Water Main, Inlet: G3/4 (Rear)	Direct Connection to Water Main, Inlet: G3/4 (Rear)
Connections - Drain	Outlet: R3/4 (Rear)	Outlet: R3/4 (Rear)
Ice Making System	Thin ice forming inside Cylinder (Flake Ice)	Thin ice forming inside Cylinder (Nugget Ice)
Compressor	Hermetic	Hermetic
Condenser	Fin and Tube type, Air-cooled	Fin and Tube type, Air-cooled
Heat Rejection (AT.32˚C, WT.21˚C)	1350W	1350W
Evaporator	Tube coiled around Cylinder (Solder Plated)	Tube coiled around Cylinder (Solder Plated)
Refrigerant	R134a	R134a
Ice Making Water Control	Float Switch and Water Valve	Float Switch and Water Valve
Electrical Circuit Protection	Circuit Breaker, Earth Wire	Circuit Breaker, Earth Wire
Refrigerant Circuit Protector	Compressor Internal Thermostat (Auto-reset), Pressure Switch (Auto-reset)	Compressor Internal Thermostat (Auto-reset), Pressure Switch (Auto-reset)
Mechanism Protection	Micro switch (Manual-reset)	Micro switch (Manual-reset)
Interlock	Shutdown by Microprocessor (Manual-reset)	Shutdown by Microprocessor (Manual-reset)
Dimensions Product excl. Packaging	560 x 700 x 780 (W x D x H, mm)	560 x 700 x 780 (W x D x H, mm)
Dimensions Product incl. Packaging	671 x 820 x 971 (W x D x H, mm)	671 x 820 x 971 (W x D x H, mm)
Weight Gross / Net	75kg / 68kg	75kg / 68kg

Operation Conditions	
Ambient Temperature	5 - 40°C
Water Supply Temperature	5 - 35°C
Water Supply Pressure	0,05-0,8MPa (0,5-8bar)
Voltage Range	Rated Voltage ±10%

Accessories
Mounting Bracket
Installation Kit

For more information please contact your local sales office:

Hoshizaki Belgium: info@hoshizaki.be
Hoshizaki Deutschland: info@hoshizaki.de
Hoshizaki France: info@hoshizaki.fr
Hoshizaki Iberia: info@hoshizaki.es
Hoshizaki Middle East: sales@hoshizaki.ae

Hoshizaki Nederland: sales@hoshizaki.nl
Hoshizaki United Kingdom: uksales@hoshizaki.co.uk
Other countries: sales@hoshizaki.nl

www.hoshizaki-europe.com