FM-1200ALKE FLAKE ICE MAKER / FM-1200ALKE (-N) NUGGET ICE MAKER

Product Description

The FM-1200ALKE (-N) is a modular ice maker which produces either flake or nugget ice. This product works in combination with an external compressor and condenser. The flake and nugget ice is popular for a variety of cooling purposes including the display of fish and fresh produce as well as in the medical world for cooling blood and organs.



- Hoshizaki ice makers are micro computer controlled, controlling the ice making process to perform at its best under varying circumstances, without having to make physical adjustments.
- The characteristics of the ice produced by Hoshizaki ice makers means that 'freeze-burn' is no longer an issue when displaying fresh fish or produce.
- Quality stainless steel auger and evaporator increase the life expectancy of these components and the whole ice maker, as well as reducing costly maintenance visits.
- An easily cleanable air filter allows end users to carry out a routine cleaning schedule, extending product life expectancy and reducing the frequency and costs of maintenance call-outs.
- Due to the auger system the water consumption is equal to the ice production.

Available Models

FM-1200ALKE (Air Cooled)
FM-1200ALKE-N (Air Cooled)

Ice

Model	Shape
FM-1200ALKE	Flake - Approx. (70% ice hardness, 30% water)
FM-1200ALKE-N	Nugget - Approx. (88% ice hardness, 12% water)

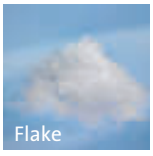



Bins

Model	Type of Bin	Max. Bin Capacity
B-501SA	Modular	217 kg
B-801SA, Top Kit TK 18 D		348 kg

Production

Model	Ice Production per 24h	Temperature	Water Consumption per 24h
FM-1200ALKE	Approx. 1200 kg Approx. 1040kg Approx. 890 kg	AT.10°C, WT.10°C AT.21°C, WT.15°C AT.32°C, WT.21°C	Approx. 1,21m³ Approx. 1,05m³ Approx. 0,90m³
FM-1200ALKE-N	Approx. 1060 kg Approx. 920 kg Approx. 800 kg	AT.10°C, WT.10°C AT.21°C, WT.15°C AT.32°C, WT.21°C	Approx. 1,07m³ Approx. 0,93m³ Approx. 0,81m³

Two year warranty

For more information visit our website at www.hoshizaki-europe.com
Hoshizaki Europe B.V. retains the right to change products and their specifications without prior notice.

FM-1200ALKE FLAKE ICE MAKER / FM-1200ALKE-N NUGGET ICE MAKER

FM-1200ALKE / FM-1200ALKE-N

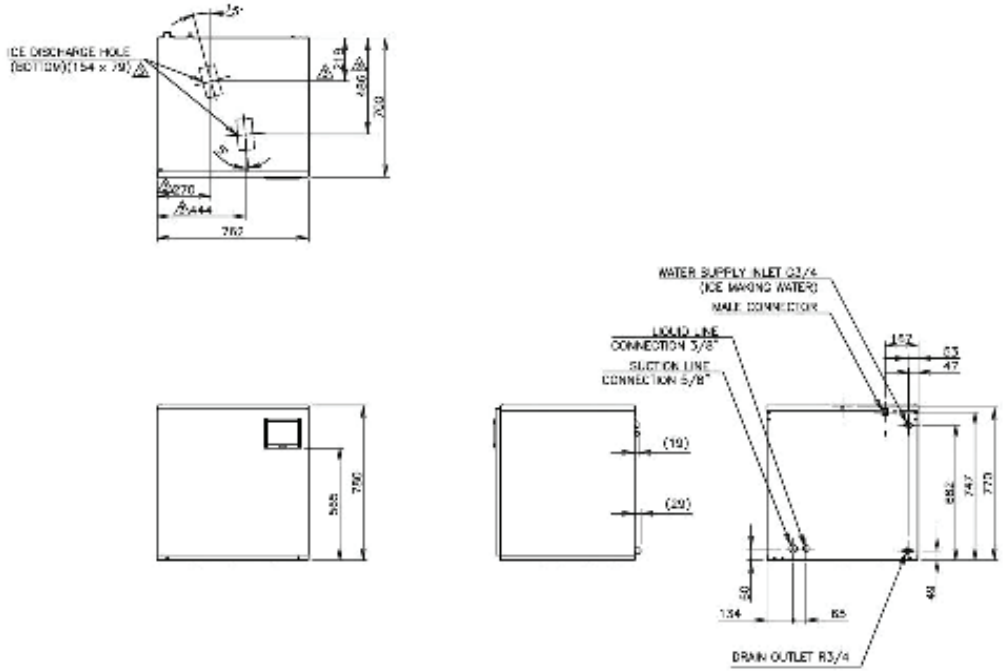

Specification	FM-1200ALKE	FM-1200ALKE-N
Power Supply	1 Phase 220-240V 50Hz Capacity: 0.74kVa (3.2A)	1 Phase 220-240V 50Hz Capacity: 0.74kVa (3.2A)
Amperage (AT.32°C, WT.21°C)	2.5A Starting: 11 A	2.6A Starting: 11 A
Electric Consumption	470W (Power Factor: 81%)	515W (Power Factor: 86%)
Exterior	Stainless Steel, Galvanized Steel (Rear)	Stainless Steel, Galvanized Steel (Rear)
Insulation Foam / Blowing Agent	HFC-245fa, 365mfc	HFC-245fa, 365mfc
Connections - Water Supply	Direct Connection to Water Main, Inlet: 3/4" (Rear)	Direct Connection to Water Main, Inlet: 3/4" (Rear)
Connections - Drain	Outlet: 3/4" (Rear)	Outlet: 3/4" (Rear)
Ice Making System	Thin ice forming inside Cylinder (Flake Ice)	Thin ice forming inside Cylinder (Nugget Ice)
Compressor (-25°C)	2830W	2830W
Condenser	-	-
Heat Rejection (AT.32°C, WT.21°C)	-	-
Evaporator	Tube coiled around Cylinder (Solder Plated)	Tube coiled around Cylinder (Solder Plated)
Refrigerant	R404A	R404A
Ice Making Water Control	Float Switch and Solenoid Valve	Float Switch and Solenoid Valve
Electrical Circuit Protection	Circuit Breaker, Earth Wire	Circuit Breaker, Earth Wire
Gear Motor Protection	Thermal Protector (Auto- reset) Motor Rotation Protection, Current Protection (Manual-reset)	Thermal Protector (Auto- reset) Motor Rotation Protection, Current Protection (Manual-reset)
Refrigerant Circuit Protector	-	-
Mechanism Protection	Micro switch (Manual-reset)	Micro switch (Manual-reset)
Interlock	Shutdown by Microprocessor (Manual-reset)	Shutdown by Microprocessor (Manual-reset)
Dimensions Product excl. Packaging	762 x 700 x 780 (W x D x H, mm)	762 x 700 x 780 (W x D x H, mm)
Dimensions Product incl. Packaging	873 x 820 x 947 (W x D x H, mm)	873 x 820 x 947 (W x D x H, mm)
Weight Gross / Net	108 kg / 98 kg	108 kg / 98 kg

Operation Conditions	
Ambient Temperature	5 - 40°C
Water Supply Temperature	5 - 35°C
Water Supply Pressure	0,05-0,8MPa
Voltage Range	Rated Voltage ± 10%

Accessories
Mounting Bracket
Installation Kit

For more information please contact your local sales office:

Hoshizaki Belgium: info@hoshizaki.be
Hoshizaki Deutschland: info@hoshizaki.de
Hoshizaki France: info@hoshizaki.fr
Hoshizaki Iberia: info@hoshizaki.es
Hoshizaki Middle East: sales@hoshizaki.ae

Hoshizaki Nederland: sales@hoshizaki.nl
Hoshizaki United Kingdom: uksales@hoshizaki.co.uk
Other countries: sales@hoshizaki.nl

www.hoshizaki-europe.com