ITEM #

MODEL #

NAME #

SIS #

AIA #

Warewashing
Hood Type Dishwasher, Manual with Advanced Filtering System & Detergent Dispenser



Warewashing

Hood Type Dishwasher, Manual with Advanced Filtering System & Detergent Dispenser

504275 (ZHT8IG)	Hood type dishwasher, with double skin insulated manual hood, guaranteed rinse system (Active), advanced filtering system, built-in rinse aid dispenser, detergent dispenser and drain pump, 80r/h

Short Form Specification

Item No.

304 Stainless steel construction to include double skin insulated hood, external, front and side panels, wash tank, tank filter plus wash and rinse arms. Uses 2 liters of clean water per final rinse cycle. 84°C rinse temperature and pressure guaranteed by AISI 304 built in atmospheric boiler and built in rinse booster pump. Washing performance is guaranteed by a powerful 0.8 kW wash pump and upper and lower stainless steel revolving washing spray arms. Unit to feature Guaranteed Rinse System (ACTIVE) led light. Green light will indicate that all items washed have been properly rinsed. Advanced Filtering System removes majority of soil from the wash water. The unit shall include drain pump, detergent and rinse aid dispenser pumps and is equipped with flexible fill hoses. Convertible from straight to corner operation and delivered on height-adjustable feet.

Main Features

- Advanced Filtering System provides cleaner wash water and higher active detergent thus ensuring better washing performances and lower running costs.
- Requires only 2 liters of water per washing cycle thus ensuring low energy, water, detergent and rinse aid consumption.
- Built-in atmospheric boiler sized to raise incoming water to a minimum of 84 °C for sanitizing rinse. No external booster is required. Constant temperature of 84 °C throughout the rinsing cycle regardless of the network's water pressure.
- Unique temperature interlock guarantees required temperatures in both the wash and final rinse.
- Incorporated Soft Start feature to offer additional protection to more delicate items.
- Slanted wash arms and sloped ceiling to avoid detergent-filled wash water dropping on clean dishes after the rinsing phase, thus guaranteeing ideal washing results.
- Cycle may be interrupted at any time by lifting the hood.
- Automatic self-cleaning cycle and self-draining vertical wash pump and boiler to avoid bacteria proliferation.
- State-of-the-art electronic controls with built-in programming, self-diagnostics for serviceability and automatic interior self-cleaning cycle.
- Built-in rinse aid and detergent dispenser with automatic initial and continuous cycle loading for perfect result while minimizing service and maintenance needs.
- Boiler power setting from control panel to facilitate technician's operation when reducing total installed power, thus avoiding the need of machine opening.
- Three phase electrical connection, convertible to single phase on-site.
- IP25 protection against water jet, solid objects and small animals (larger than 6 mm).
- Green light of Guaranteed Rinse System (ACTIVE) confirms that items have been rinsed properly.
- CLEAR BLUE advanced filtering system provides cleaner wash water and higher active detergent thus ensuring better washing performances and lower running costs.
- NSF/ANSI 3 and DIN 10512 compliant.
- Maximum capacity per hour of 80 racks or 1.440 dishes (High productivity mode) easy to switch to 63 racks or 1.134 dishes (NSF/ANSI 3 mode) by pressing a button.
- 45/84/150 seconds cycles (High productivity mode); 57/84/150 seconds cycles (NSF/ANSI 3 mode).
- The machine can be connected to cold water**.

APPROVAL:

Warewashing
Hood Type Dishwasher, Manual with Advanced Filtering System & Detergent Dispenser

ZANUSSI PROFESSIONAL

Warewashing
Hood Type Dishwasher, Manual with Advanced Filtering System & Detergent Dispenser

Construction

- Heavy duty Stainless steel construction. Internal cavity as well as exterior panels are in 304 series Stainless steel.
- Pressed tank in front position to facilitate cleaning.
- Double skin insulated hood.
- Specially designed Stainless steel wash/rinse arms and nozzles provide superior cleaning action.
- Revolving interchangeable Stainless steel wash/rinse arms above and below the rack, screw out for simple clean up.
- Pre-arranged for on-site HACCP implementation and Energy Management device.
- Element protection from dry fire and low water.
- Unit to include drain, detergent and rinse aid dispenser pumps

Included Accessories

• 2 of Yellow cutlery container	PNC 864242
• 1 of Basket for 18 dinner plates or 27 side plates (max. diam. 240 mm)	PNC 867002
• 1 of Basket for cups and coffee cups (24-48 pcs) - blue	PNC 867007

Optional Accessories

• Kit 8 plastic boxes for cutlery - yellow	PNC 780068 ❑
• External manual water softener - 12 lt	PNC 860412 ❑
• External automatic water softener - 8 lt	PNC 860413 ❑
• External manual water softener - 20 lt	PNC 860430 ❑
• Haccp connection cable for hood type	PNC 864007 ❑
• Stainless steel inlet hose kit	PNC 864016 ❑
• Filter for partial demineralization	PNC 864017 ❑
• Kit to measure total/partial water hardness	PNC 864050 ❑
• Yellow cutlery container	PNC 864242 ❑
• Back panel with double skin manual hood type - AISI 304	PNC 864342 ❑
• Filter for total demineralization	PNC 864367 ❑
• Front control panel for double skin hood type dishwasher	PNC 864373 ❑
• Reverse osmosis filter for single tank dishwasher with atmosphere boiler	PNC 864388 ❑
• Pressure reducer for single tank dishwasher	PNC 864461 ❑
• Kit of rack and support to wash fryer basket	PNC 864463 ❑
• Deliming device kit (pump and air gap) for hood type	PNC 864526 ❑
• Connecting kit for duet manual hood type dishwasher	PNC 865264 ❑
• Set of 4 yellow cutlery containers	PNC 865574 ❑
• Basket for 6 trays 530x370 mm	PNC 866743 ❑
• Basket for 12 soup plates or 12 cups (max. diam. 240 mm)	PNC 867000 ❑
• Basket for 18 dinner plates or 27 side plates (max. diam. 240 mm)	PNC 867002 ❑
• Basket for cups and coffee cups (24-48 pcs) - blue	PNC 867007 ❑
• Basket for bulk cutlery-capacity: 100 pieces - brown	PNC 867009 ❑
• Cover grid for small/light items in rack	PNC 867016 ❑
• Basket for 25 glasses max. height: 120 mm diameter: 80 mm - blue	PNC 867021 ❑
• Basket for 16 glasses max. height: 70 mm - blue	PNC 867023 ❑
• Basket semi-professional (500x500x190mm)	PNC 867024 ❑
• Basket for 16 glasses max. height: 220 mm diameter: 100 mm - blue	PNC 867040 ❑

ZANUSSI PROFESSIONAL

Warewashing
Hood Type Dishwasher, Manual with Advanced Filtering System & Detergent Dispenser

Front

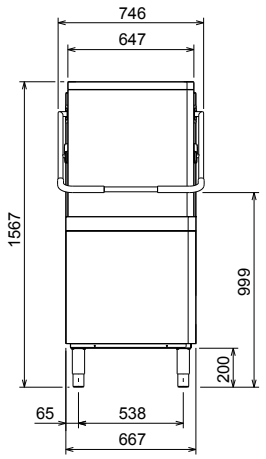

Top

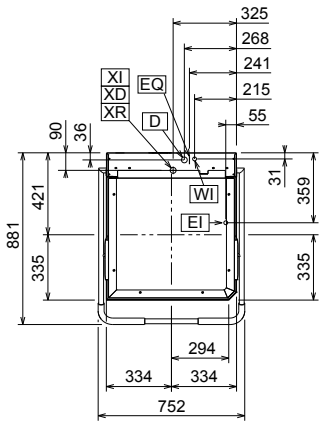

CWI1	=	Cold Water inlet 1	**XI**	=	Chemicals inlet
D	=	Drain	**XR**	=	Rinse aid connection
EI	=	Electrical connection			
HWI	=	Hot water inlet			
V	=	Air vents			
WI	=	Water inlet			
XD	=	Detergent connection			

Side

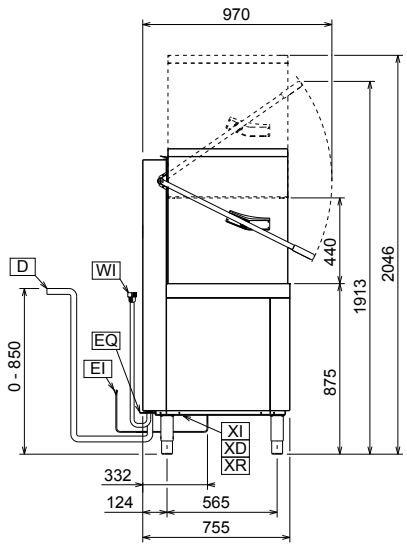

Electric

Supply voltage:	
504275 (ZHT8IG)	400 V/3N ph/50 Hz
Convertible to:	230V 1N~; 230V 3~
Default Installed Power:	9.9 kW
Reducible Installed Power:*	6.9 kW
Boiler Heating Elements Power:*	9 kW
Boiler Reducible To:*	6 kW
Tank heating elements:	3 kW
Wash pump size:	0.8 kW

Water:

Water supply temperature:	10-65 °C
Inlet Water supply pressure:	0.5 - 7 bar
Water consumption per cycle (lt):	2
Boiler Capacity (lt):	12
Tank Capacity (lt):	24
Drain line size:	20.5 mm
Incoming water line size:	G 3/4"

Key Information:

N° of cycles:	3
Duration cycle - High productivity:*	45/84/150 sec.
Duration cycle - NSF/ANSI 3 compliant:	57/84/150 sec.
Racks per hour - High productivity: *	80
Racks per hour - NSF/ANSI 3 compliant:	63
Dishes per hour - High productivity: *	1440
Dishes per hour - NSF/ANSI 3 compliant:	1134
Wash temperature - High productivity:	55-65 °C
Wash temperature - NSF/ANSI 3 compliant:	75 °C
Rinse temperature (MIN):	84 °C
Net weight:	117 kg
Shipping weight:	129 kg
Shipping volume:	1.04 m³
Packaging size (WxDxH):	667x755x1567 mm
Noise level:	<63 dBA

* According to market standard, the productivity is declared at an inlet water supply temperature of 50°C . If the water is supplied at 65°C, the power can be reduced by 3 kW without any loss in productivity.

** When connected to cold water, the cycle time will be prolonged accordingly. The machine will have productivity per hour of 48 racks at 10°C supply temperature or 55 racks at 20°C supply temperature.

Recommended table connection

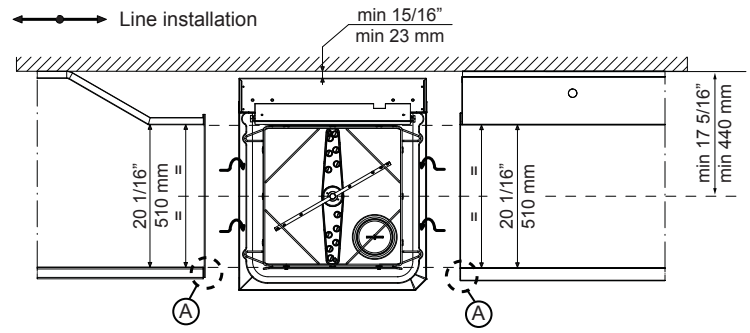

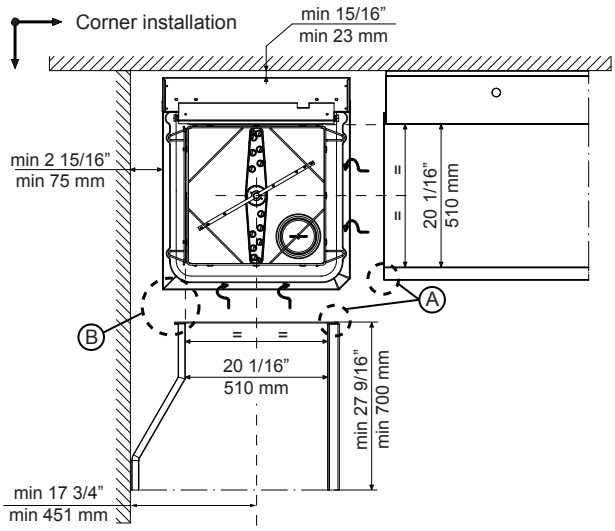

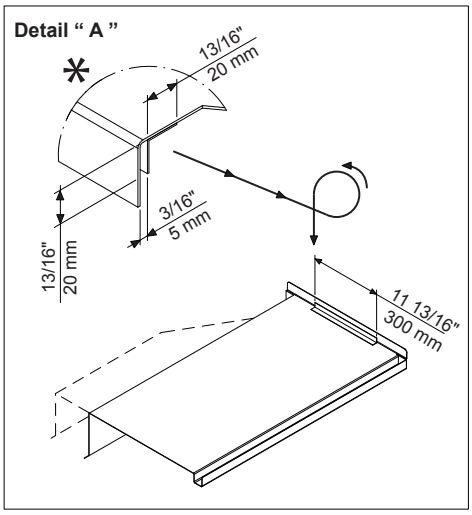

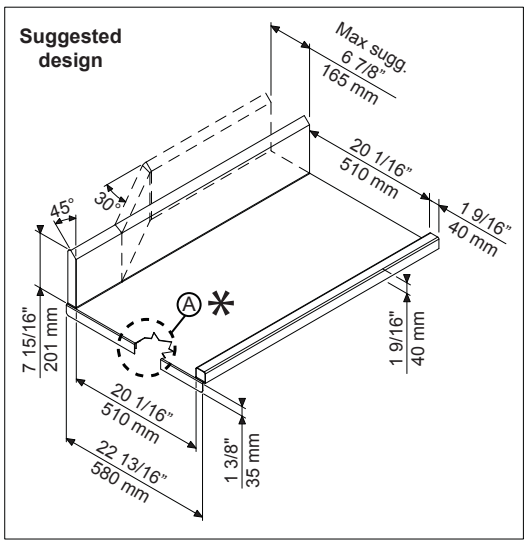

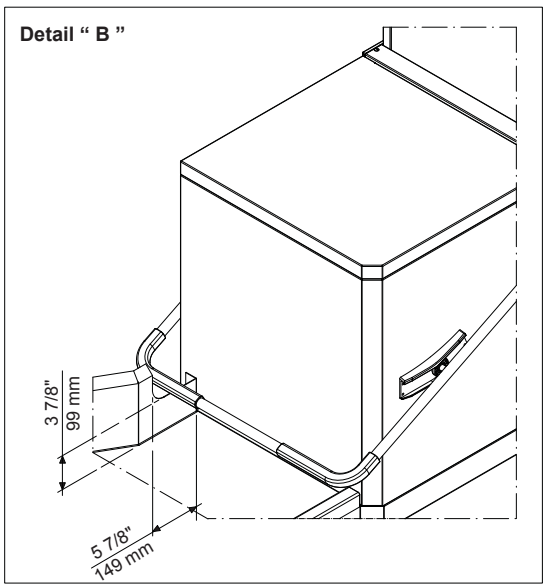

All tables must be connected to the dishwashing units according to local regulations and industry standards which may differ from the recommendations herein suggested. Electrolux Professional is not liable for any failure in complying with local design standards.

Doc Nr : 59566BF00

The company reserves the right to make modifications to the products without prior notice. All information correct at time of printing.