

- **Stainless Steel Body including washing and boiler tank**
- **Monoblock washing tank with round corners - Hygenic**
- **69 racks per hour for OBM 1080 (Rack dimension 50x50)**
- **50 racks per hour for OBO 1000 EKO (Rack dimension 50x50)**
- **2.8 l water consumption per cycle**
- **OBO 1000 EKO: Single washing programme - Cycle 72 seconds**
- **OBM 1080: 3 Selectable Washing Programmes - Cycle 52,102,132 seconds**
- **Suitable for corners and in-line installations**
- **Washing arms both available in stainless steel and reinforced polypropylene**
- **Adjustable feet for height optimization**
- **Easy start up: Single button for water filling and heating in the boiler tank**
- **Electrical components and cabling according to international standarts and safety regulations.**
- **The dishwasher is completely sealed to guarantee IPX5 water protection**
- **Thermostat-controlled rinsing and washing temparatures for efficient washing**
- **Non-return - Check valve System**
- **Washing temperature at 55-60°C (water supply at a minimum of 2 bar and 50°C)**
- **Rinsing temperature at 80-85°C (water supply at a minimum of 2 bar and 50°C)**
- **Max. loading height**

OBM 1080
OBO 1000 EKO

Dishwasher

STANDART EQUIPMENT	OBO 1000 EKO	OBM 1080
Rinsing Pump	N / A	✓
3 Baskets Promotional (Plate, Glass and Cutlery)	✓	✓
Electrical Connection Cable, Flexible Water Supply and Drain Hose	✓	✓

OPTIONAL ACCESSORIES
- Stainless Steel Washing Arms
- Detergent Dispenser
- Rinse Aid Dispenser
- Drain Pump

Technical Features	OBM 1080	OBO 1000 EKO
Code	0710.01080.00	0710.EKO10.00
Total power	10 kW	8.3 kW
Electric connection	400 V 3NPE 50 Hz	400 V 3NPE 50 Hz
Washing capacity (Plate/hr)	1080	750
Washing capacity (Basket/hr)	69	50
Washing / Boiler tank capacity	37/7	37/7
Washing water temp.	55-60	55-60
Rinsing water temp.	80-85	80-85
Washing programme	3	1
Water inlet connection	R 3/4”	R 3/4”
Washing pump power	0.66 kW	0.66 kW
Rinsing pump power	0.37 kW	-
Water inlet pressure / Temp.	2-4/50°C	2-4/50°C
Heat power (Washing/Rinsing)	3/9 kW	3/7.5 kW
Dirty water discharge connection	1 1/4”(Ø 42mm)	1 1/4”(Ø 42mm)
Max. noise	85	85
Gross weight	115 (±5)	115 (±5)
Dimensions (LxWxD)	600x735x1420 (1860)	600x735x1420(1860)
Protection class	IPX5	IPX5
Rack Dimensions	50x50	50x50
Loading height	34	34
Price		

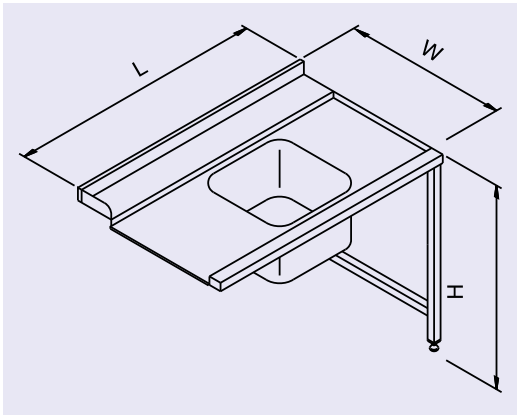

Dishwasher inlet table (right)

CODE / KOD	L	W	H	m³	PRICE FİYAT
7711.07075.21	700	750	850	0.54 m³	
7711.09075.21	900	750	850	0.67 m³	
7711.12075.21	1200	750	850	0.90 m³	
7711.14075.21	1400	750	850	1.05 m³	
7711.16075.21	1600	750	850	1.19 m³	
7711.19075.21	1900	750	850	1.40 m³	

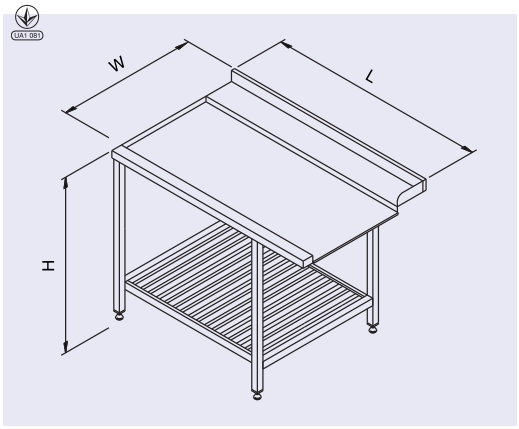

Dishwasher extra accessories (optional)

TYPE / TİP	CODE / KOD	L	W	H	m³	PRICE FİYAT
Plate Basket Tabak Basketi	8740.0TB50.00	500	500	100	0.02 m3	
Glass Basket Bardak Basketi	8740.DBB50.00	500	500	100	0.02 m3	
Spoon-Fork Basket Çatal-Kaşık Basketi	8740.CKB50.00	500	500	100	0.02 m3	
Pre-Wash Hose (fix on the table) Ön Yıkama Duşu(tezgahamonte)	9760.24030.33	-	-	-	-	
Pre-Wash Hose (fix on the table) Ön Yıkama Duşu(duvarahamonte)	9760.40005.23	-	-	-	-	
Basket Trolley Basket Taşıma Arabası	7959.60578.40	600	600	850	0.10 m3	
Rack Extender 25 Compartment 5x5 Yükseltici	8740.0BB25.00	500	500	100	-	
Rack Extender 25 Compartment 5x5 Yükseltici	8740.0BY25.00	500	500	50	-	
Rack Base 36 Compartment 6x6 Bölmeli Bardak Basketi	8740.0BB36.00	500	500	100	-	
Rack Extender 36 Compartment 6X6 Yükselticii	8740.0BY36.00	500	500	50	-	

Dishwasher outlet table (left)

CODE / KOD	L	W	H	m³	PRICE FİYAT
7711.07075.12	700	750	850	0.54 m³	
7711.09075.12	900	750	850	0.67 m³	
7711.12075.12	1200	750	850	0.90 m³	
7711.14075.12	1400	750	850	1.05 m³	
7711.16075.12	1600	750	850	1.19 m³	
7711.19075.12	1900	750	850	1.40 m³	







Pre-wash hose



Basket basket



Basket

OBM 1080	STANDARD ACCESSORIES	EXTRA ACCESSORIES (optional)
	• 3 washing baskets.	• Spare rack (for plates, glasses and cutlery). • Feeding and collecting benches. • Pre-wash hose. • Basket rack trolley. • Spray.

OBO 1000/ EKO	STANDARD ACCESSORIES	EXTRA ACCESSORIES (optional)
	• 3 washing baskets.	• Spare rack (for plates, glasses and cutlery). • Feeding and collecting benches. • Pre-wash hose. • Basket rack trolley. • Spray.