DV 125.2

Dish & Glass Utensil Washing Machine



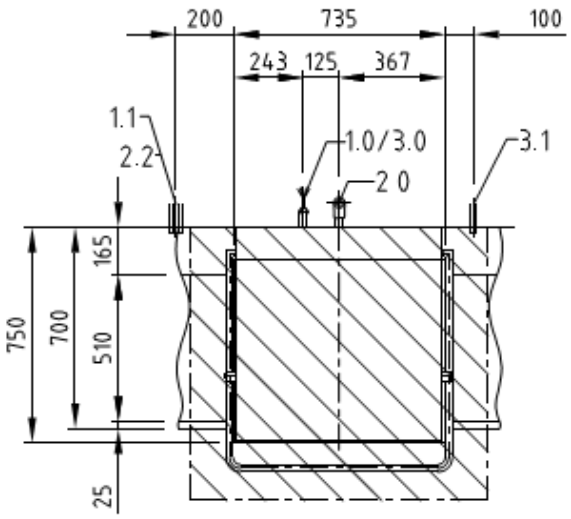

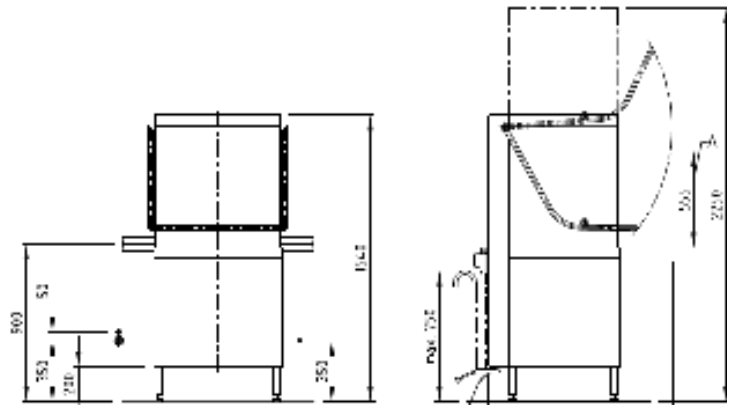

Product Features & Benefits

- Fully insulated hood as standard for sound absorbency and so heat is retained in the machine
- 3 program cycles with varying pump pressure
- AktivPlus drain filter system for excellent wash results due to double filtered fresh water
- Fully electronic control system MIKE 2 with integrated infrared technology for simple and rapid service
- Stainless Steel wash and rinse arms for demanding use
- Rinse aid pump as standard
- Self-cleaning program for easy, hygienic cleaning of the wash chamber
- Above average entry height which is ideal for tall dishware including large plates and trays
- Deep drawn wash tank with coved corners for easy cleaning and reduced build-up of dirt
- Aqua Stop system with base drip tray for early intervention on any leaks in the machine

Optional Features

- Air Concept Heat Recovery*
- Automatic Hood*
- Liquid Detergent Dosing Unit
- Reverse Osmosis System (GiO Model)

*These items cannot be used in conjunction with one another

MEIKO DV125.2			
TECHNICAL SPECIFICATIONS			
Water consumption L/basket			3.2
Basket dimensions in mm			640 x 500
#Programme cycle in seconds			60/90/210
1.0	Machine connection drain	Pump out drain	Hose ¾ “
1.1	Drain point	Max. 300mm from floor	50mm
2.0	Machine connection point	Nominal value	Thread ¾ “
2.2	Water supply point	Flow pressure Temperature Water hardness	1 bar -5 bar Soft Hot water Max 53.4ppm
3.1	Electrical point	Three phase	3NPE 400V 50Hz, 12.6Kw

#For connection to cold water and/or short basket exchange times, the wash cycles may increase to achieve hygienic final rinse temperatures.