Electrolux

Warewashing green&clean hood type Dishwasher, Manual with ZERO LIME Device & Filtering System

ITEM #

MODEL #

NAME #

SIS #

AIA #



Warewashing

green&clean hood type Dishwasher, Manual with ZERO LIME Device & Filtering System

504256 (EHT8ILG) Green & Clean Hood Type Dishwasher, Manual Double skin hood with ZERO LIME Device, Filtering System, Detergent & Rinse aid dispensers, 80racks/hour - 400 V/3N/50 Hz

Short Form Specification

Item No.

Unit to be Electrolux Green & Clean upright hood type hot water rinsing dishwasher with WASH SAFE CONTROL. Electrical characteristics to be __400 volts, three phase 50Hz operation, convertible to single phase on-site. Uses 2 liters of clean water per final rinse cycle. 84°C rinse temperature and pressure guaranteed by built in atmospheric boiler and built in rinse booster pump. Washing performance is guaranteed by a powerful 0.8 kW wash pump and upper and lower stainless steel revolving washing spray arms. ZERO LIME Device automatically de-scales the whole hydraulic circuit and washing chamber. Unit to feature "WASH SAFE CONTROL" led light. Green light will indicate that all items washed have been properly rinsed. CLEAR BLUE filtering system removes majority of soil from the wash water. 304 Stainless steel construction to include double skin insulated hood, external, front and side panels, wash tank, tank filter plus wash and rinse arms. Unit shall be field convertible from straight to corner operation. The unit shall include drain pump, detergent and rinse aid dispenser pumps and is equipped with flexible fill hoses. Delivered on height-adjustable feet.

Main Features

- ZERO LIME Device ensures total scale removal from the boiler, the hydraulic circuits and the washing chamber allowing ultimate performances and lower energy consumption thanks to the high-efficiency heating element.
- CLEAR BLUE advanced filtering system provides cleaner wash water and higher active detergent thus ensuring better washing performances and lower running costs.
- Requires only 2 liters of water per washing cycle thus ensuring low energy, water, detergent and rinse aid consumption.
- Built-in atmospheric boiler sized to raise incoming water to a minimum of 84 °C for sanitizing rinse. No external booster is required. Constant temperature of 84 °C throughout the rinsing cycle regardless of the network's water pressure.
- Green light of "WASH SAFE CONTROL" confirms that items have been rinsed properly.
- Unique temperature interlock guarantees required temperatures in both the wash and final rinse.
- Incorporated Soft Start feature to offer additional protection to more delicate items.
- Slanted wash arms and sloped ceiling to avoid detergent-filled wash water dropping on clean dishes after the rinsing phase, thus guaranteeing ideal washing results.
- Cycle may be interrupted at any time by lifting the hood.
- Automatic self-cleaning cycle and self-draining vertical wash pump and boiler to avoid bacteria proliferation.
- State-of-the-art electronic controls with built-in programming, self-diagnostics for serviceability and automatic interior self-cleaning cycle.
- Built-in rinse aid and detergent dispenser with automatic initial and continuous cycle loading for perfect result while minimizing service and maintenance needs.
- Boiler power setting from control panel to facilitate technician's operation when reducing total installed power, thus avoiding the need of machine opening.
- Three phase electrical connection, convertible to single phase on-site.
- IP25 protection against water jets, solid objects and small animals (larger than 6 mm).
- NSF/ANSI 3 and DIN 10512 compliant.
- Maximum capacity per hour of 80 racks or 1.440 dishes (High productivity mode) easy to switch to 63 racks or 1.134 dishes (NSF/ANSI 3 mode) by pressing a button.
- 45/84/150 seconds cycles (High productivity mode); 57/84/150 seconds cycles (NSF/ANSI 3 mode).
- The machine can be connected to cold water**.

APPROVAL:

Electrolux
Warewashing green&clean hood type Dishwasher, Manual with ZERO LIME Device & Filtering System

Electrolux

Warewashing
green&clean hood type Dishwasher, Manual with ZERO LIME Device & Filtering System

Construction

- Heavy duty Stainless steel construction. Internal cavity as well as exterior panels are in 304 series Stainless steel.
- Pressed tank in front position to facilitate cleaning.
- Double skin insulated hood.
- Specially designed Stainless steel wash/rinse arms and nozzles provide superior cleaning action.
- Revolving interchangeable Stainless steel wash/rinse arms above and below the rack, screw out for simple clean up.
- Pre-arranged for on-site HACCP implementation and Energy Management device.
- Element protection from dry fire and low water.
- Unit to include drain, detergent and rinse aid dispenser pumps

Included Accessories

• 2 of Yellow cutlery container	PNC 864242
• 1 of Basket for 18 dinner plates - yellow	PNC 867002
• 1 of Basket for 48 small cups or 24 cups - blue	PNC 867007

Optional Accessories

• Kit 8 plastic boxes for cutlery - yellow	PNC 780068 ❑
• 12lt external manual water softener	PNC 860412 ❑
• 8lt external automatic water softener	PNC 860413 ❑
• 20lt external manual water softener	PNC 860430 ❑
• HACCP connection cable for double skin hood type	PNC 864007 ❑
• Stainless steel inlet hose kit	PNC 864016 ❑
• Filter for partial demineralization	PNC 864017 ❑
• Kit to measure total and partial water hardness	PNC 864050 ❑
• Yellow cutlery container	PNC 864242 ❑
• Back panel for double skin manual hood type - AISI 304	PNC 864342 ❑
• Front control panel for double skin hood type dishwasher	PNC 864372 ❑
• Reverse osmosis filter for single tank dishwasher with atmosphere boiler	PNC 864388 ❑
• Pressure reducer for single tank dishwasher	PNC 864461 ❑
• Kit of rack and support to wash fryer basket	PNC 864463 ❑
• Kit 4 plastic boxes for cutlery - yellow	PNC 865574 ❑
• Basket for 6 trays 530x370 mm - red	PNC 866743 ❑
• Basket for 12 soup bowls - green	PNC 867000 ❑
• Basket for 18 dinner plates - yellow	PNC 867002 ❑
• Basket for 48 small cups or 24 cups - blue	PNC 867007 ❑
• Basket for bulk cutlery-capacity: 100 pieces - brown	PNC 867009 ❑
• Cover rack for small and light items (500x500 baskets)	PNC 867016 ❑
• Baskets for 25 tilted glasses (h 120 mm - diam 80 mm) - blue	PNC 867021 ❑
• Basket for 16 vertical glasses (h 70 mm - diam 100 mm) - blue	PNC 867023 ❑
• Basket semi-professional 500x500x190mm	PNC 867024 ❑
• Baskets for 16 tilted glasses (h 220 mm - diam 100 mm) - blue	PNC 867040 ❑

Electrolux

Warewashing
green&clean hood type Dishwasher, Manual with ZERO LIME Device & Filtering System

Front

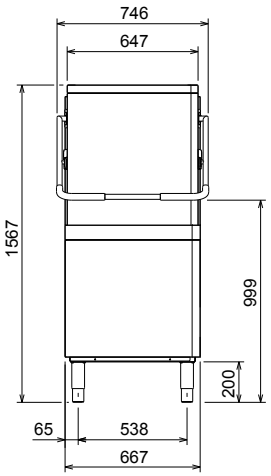

Top

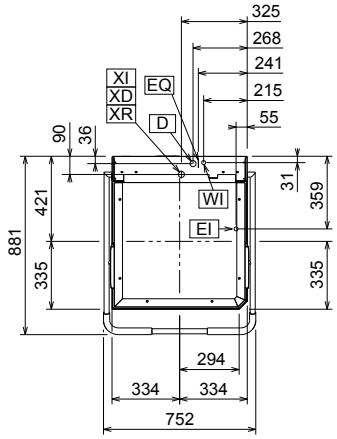

CWI1 = Cold Water inlet 1
D = Drain
EI = Electrical inlet (power)
EO = Electrical Outlet
HWI = Hot water inlet
V = Air vents
WI = Water inlet

XD = Detergent connection
XI = Chemicals inlet (generic)
XP = Chemical probe/sensor
XR = Rinse aid connection

Side

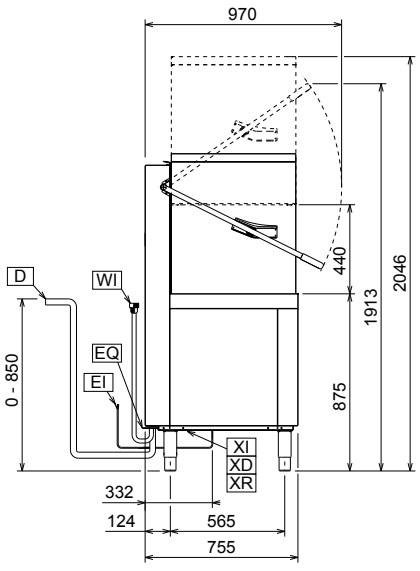

Electric

Supply voltage:	
504256 (EHT8ILG)	400 V/3N ph/50 Hz
Convertible to:	230V 1N~; 230V 3~
Default Installed Power:	9.9 kW
Reducible Installed Power:*	6.9 kW
Boiler Heating Elements Power:*	9 kW
Boiler Reducible To:*	6 kW
Tank heating elements:	3 kW

Water:

Water supply temperature:**	10-65 °C
Drain line size:	20.5 mm
Inlet water supply pressure:	0.5-7 bar
Water consumption per cycle (lt):	2
Boiler Capacity (lt):	12
Tank Capacity (lt):	24

Key Information:

N° of cycles:	3
Duration cycle - High productivity:*	45/84/150 sec.
Duration cycle - NSF/ANSI 3 compliant:	57/84/150 sec.
Racks per hour - High productivity: *	80
Racks per hour - NSF/ANSI 3 compliant:	63
Dishes per hour - High productivity: *	1440
Dishes per hour - NSF/ANSI 3 compliant:	1134
Wash temperature - High productivity:	55-65 °C
Wash temperature - NSF/ ANSI 3 compliant:	75 °C
Rinse temperature:	84 °C
External dimensions, Height:	1567 mm
External dimensions, Width:	752 mm
External dimensions, Depth:	755 mm
Net weight:	117 kg
Shipping weight:	129 kg
Shipping volume:	1.23 m³
Packaging size (WxDxH):	667x755x1567 mm
Noise level:	<63 dBA

* According to market standard, the productivity is declared at an inlet water supply temperature of 50°C . If the water is supplied at 65°C, the power can be reduced by 3 kW without any loss in productivity.

** When connected to cold water, the cycle time will be prolonged accordingly. The machine will have productivity per hour of 48 racks at 10°C supply temperature or 55 racks at 20°C supply temperature

Recommended table connection

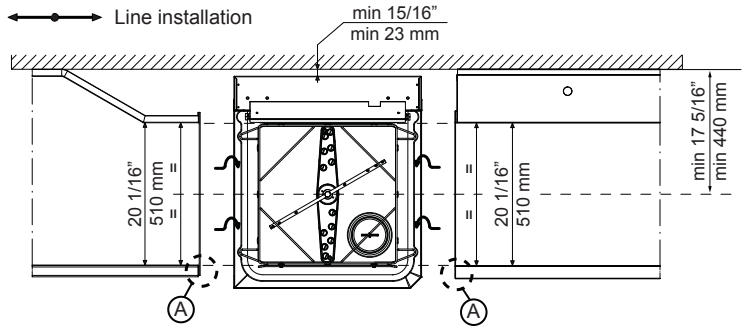

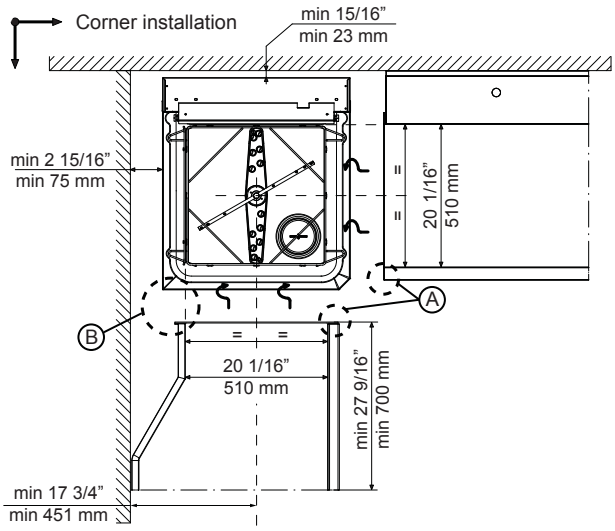

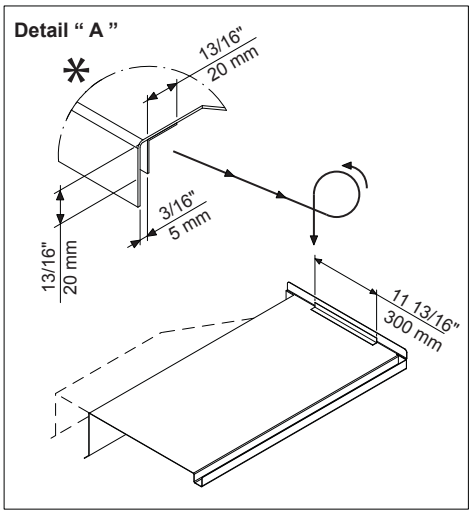

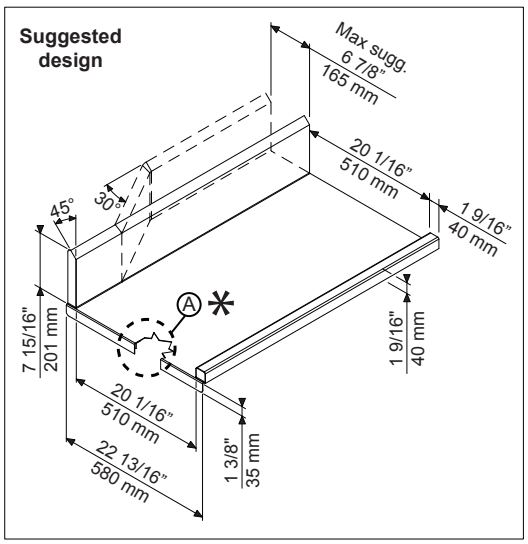

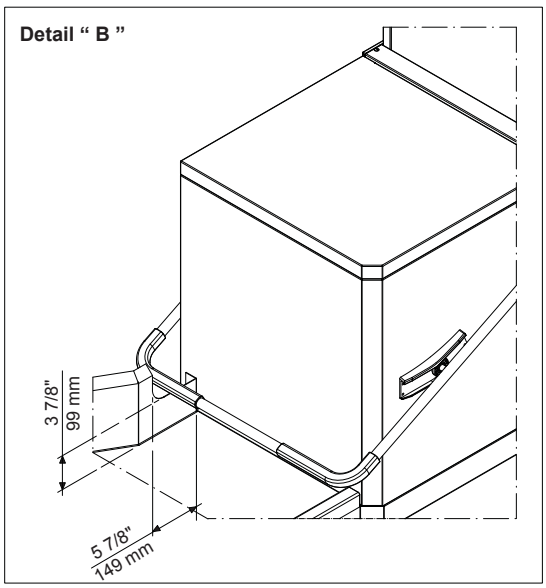

All tables must be connected to the dishwashing units according to local regulations and industry standards which may differ from the recommendations herein suggested. Electrolux Professional is not liable for any failure in complying with local design standards.

Doc Nr : 59566BF00

The company reserves the right to make modifications to the products without prior notice. All information correct at time of printing.