Electrolux

High Productivity Cooking
Easyline Electric Boiling Pan 60lt

ITEM #

MODEL #

NAME #

SIS #

AIA #



High Productivity Cooking

Easyline Electric Boiling Pan 60lt

232093 (EBE06) Electric boiling pan 60lt

Short Form Specification

Item No.

Stainless steel construction with the deep drawn pan with rounded edges manufactured from AISI 304 stainless steel. Pan can be tilted beyond 90° to completely empty the food. Motorised tilting with tilting axis located in the middle of the pan to keep the pouring lip high and allow tall vessels to be filled.
Electric heating elements submerged directly in the water of the jacket. Food is uniformly heated via the base and the side walls of the pan by an indirect heating system using integrally generated saturated steam at a temperature of 108°C in a jacket with an automatic deaeration system. Safety valve avoids overpressure of the steam in the jacket. Safety thermostat protects against low water level. Max pressure at 0,5 bar.
High thermal input and fast heat up. Electromechanical control. Lower temperature outside the panels. IPX5 water protection. For freestanding installation one left column is necessary for each unit.

Main Features

- Food is uniformly heated in the base and side walls of the kettle by an indirect heating system that uses integrally generated saturated steam at a temperature of 108° C in the jacket with an automatic deaeration system.
- High thermal input and fast heat up.
- Ergonomic vessel dimensions, with a large diameter and shallow depth facilitates stirring and gentle food handling.
- Curved pan base guarantees that the appliance ia also suitable to prepare small quantities of food.
- Safety thermostat protects against low water level.
- Safety valve avoids overpressure of the steam in the jacket.
- High-quality thermal insulation of the pan saves energy and keeps operating ambient temperature low.
- Compliant to CE requirements for safety.
- Constructed to meet the highest hygiene standards.
- Safe thanks to the higher water protection IPX5 and the lower temperature outside the panels.
- Fast working thanks to the high efficient heating technology and well insulation that keeps the heat inside the well.

Construction

- AISI 304 stainless steel construction, including deep drawn pan with rounded edges.
- Max pressure at 0,5 bar.
- Vessel can be tilted beyond 90° to completely empty the food.
- Motorised tilting.
- Electromechanical control.
- Ergonomic and user friendly thanks to the high tilting position and the pouring lip design which allow to easily fill containers.
- Tilting axis located in the middle of the pan keeps the pouring lip high and allow tall vessels to be filled.
- Electric heating elements are submerged directly in the water of the jacket, the heat losses are very low and the efficiency of the pan accordingly high.

Optional Accessories

- Left leg/column (to be ordered always one unit for single or multiple installation) PNC 928000 ❑
- Floor fastening kit (fastening is integrated in the floor - for a correct installation you need 1 for each pan plus 1 for the left column) PNC 928001 ❑
- Kit for a correct and easy positioning and installation of the pan (for a correct installation you need 1 for each pan) PNC 928002 ❑
- Floor fastening kit (fastening on the floor surface) PNC 928003 ❑

APPROVAL:

Electrolux
High Productivity Cooking
Easyline Electric Boiling Pan 60lt

• Measure stick 60lt	PNC 928006 ❑
• Strainer 8mm holes 60lt	PNC 928010 ❑
• Bottom grid 60lt	PNC 928014 ❑
• Basket 60lt, 2 required per pan	PNC 928018 ❑
• Lifting hook, 2 required	PNC 928021 ❑

The company reserves the right to make modifications to the products without prior notice. All information correct at time of printing.

High Productivity Cooking
Easyline Electric Boiling Pan 60lt

Front

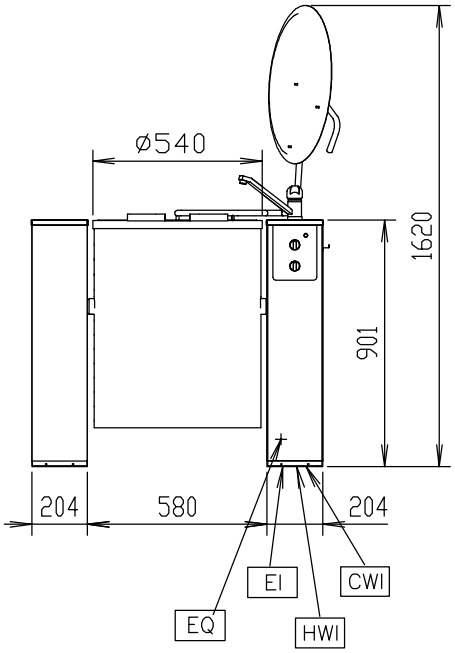

Top

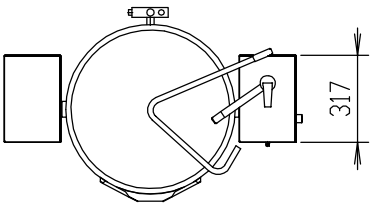

CWI1 = Cold Water inlet
EI = Electrical connection
HWI = Hot water inlet

Side

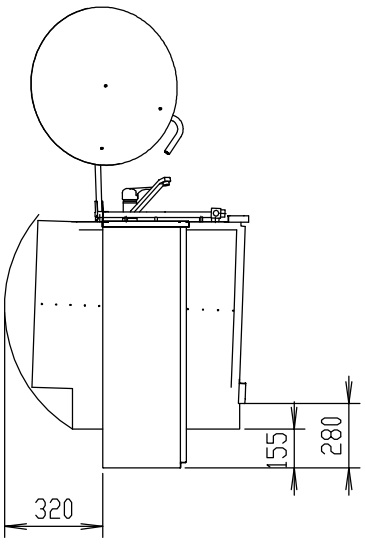

Electric

Supply voltage:	
232093 (EBE06)	400 V/3N ph/50 Hz
Electrical power, max:	12 kW

Key Information:

Working Temperature MIN:	30 °C
Working Temperature MAX:	108 °C
External dimensions, Height:	900 mm
External dimensions, Depth:	700 mm
Net vessel useful capacity:	60 lt
Tilting mechanism:	Automatic
Bearing:	Central

The company reserves the right to make modifications to the products without prior notice. All information correct at time of printing.

2015.11.16