Electrolux

# Modular Cooking Range Line
# 900XP Gas Cylindrical Boiling Pan
# 150lt indirect heat

ITEM #

MODEL #

NAME #

SIS #

AIA #



**391102 (E9BSGHIRF0)** 150-lt gas boiling pan with pressure switch, indirect heating

## Short Form Specification

**Item No.**

Suitable for natural gas or LPG. To be installed on cantilever systems but also incorporates fixing points for bridging. Robust burners in stainless steel with flame failure device and protected pilot light. Exterior panels of unit in stainless steel with Scotch Brite finish. Double jacketed lid made in 2mm thick AISI 316 stainless steel. Pressed well with rounded edges manufactured from AISI 316 stainless steel. Right-angled side edges to allow flush-fitting junction between units. Includes safety valve to control working pressure. Temperature limiter for power regulation allowing precise temperature cooking.

**APPROVAL:**

## Main Features

- Round kettle is suitable to cook, sauté or poach all kinds of produce.
- Produce is uniformly heated in the base and side walls of the kettle by an indirect heating system that uses integrally generated saturated steam at a temperature of 110° C in the jacket.
- External valve allows to manually evacuate excess air accumulated in the jacket during heating phase.
- Appliance is IPX5 water resistance certified.
- Manometer allows to correctly control the functioning of the pan.
- Energy regulation through a control knob.
- Safety thermostat protects against low water level.
- Safety valve avoids overpressure of the steam in the jacket.
- No overshooting of cooking temperatures, fast reaction.
- Large capacity food tap enables safe and effortless discharging of contents.
- Firmly fitting cover to reduce cooking time and save energy costs.
- Ergonomic: the depth of the vessel facilitates stirring the food, also the most delicate food.
- Discharge tube and tap are very easy to clean from outside.
- Closed heating system – no waste of energy.
- Solenoid valve to refill with hot and cold water.
- Smooth large surfaces, easy access for cleaning.
- Pressure switch control monitors energy and water consumption.
- The special design of the control knob system guarantees against water infiltration.

## Construction

- Kettle shall be double jacketed including high quality thermal insulation of the pan, saving energy and keeping ambient temperature low.
- Pressed cooking vessel and double jacket in 316 AISI Stainless steel.
- Robust burners in stainless steel with flame failure device, protected pilot light and optimized combustion.
- All exterior panels in Stainless Steel with Scotch Brite finishing.
- Model has right-angled side edges to allow flush fitting joints between units, eliminating gaps and possible dirt traps.

## Included Accessories

| | |
|---|---|
| • 1 of Water additive against corrosion for indirect boiling pans | PNC 927222 |

## Optional Accessories

| | |
|---|---|
| • Junction sealing kit | PNC 206086 ❑ |
| • Draught diverter, 150 mm diameter | PNC 206132 ❑ |



Electrolux
Modular Cooking Range Line
900XP Gas Cylindrical Boiling Pan 150lt indirect heat

- Matching ring for flue condenser, 150 mm diameter PNC 206133 ❑
- Kit 4 wheels - 2 swivelling with brake - it is mandatory to install base support and wheels PNC 206135 ❑
- Flanged feet kit PNC 206136 ❑
- Frontal kicking strip for concrete installation, 800mm PNC 206148 ❑
- Frontal kicking strip for concrete installation, 1000mm PNC 206150 ❑
- Frontal kicking strip for concrete installation, 1200mm PNC 206151 ❑
- Frontal kicking strip for concrete installation, 1600mm PNC 206152 ❑
- Frontal kicking strip, 800mm (not for refr-freezer base) PNC 206176 ❑
- Frontal kicking strip, 1000mm (not for refr-freezer base) PNC 206177 ❑
- Frontal kicking strip, 1200mm (not for refr-freezer base) PNC 206178 ❑
- Frontal kicking strip, 1600mm (not for refr-freezer base) PNC 206179 ❑
- Pair of side kicking strips (not for refr-freezer base) PNC 206180 ❑
- 2 panels for service duct for single installation PNC 206181 ❑
- 2 panels for service duct for back to back installation PNC 206202 ❑
- Kit 4 feet for concrete installation (not for 900 line free standing grill) PNC 206210 ❑
- Flue condenser for 1 module, 150 mm diameter PNC 206246 ❑
- Kit for automatic depressuring of the double jacket for 100/150 lt indirect and autoclave boiling pans PNC 206279 ❑
- Chimney upstand, 800mm PNC 206304 ❑
- Base support for feet or wheels - 800mm (700/900) PNC 206367 ❑
- Base support for feet or wheels - 1200mm (700/900) PNC 206368 ❑
- Base support for feet or wheels - 1600mm (700/900) PNC 206369 ❑
- Base support for feet or wheels - 2000mm (700/900) PNC 206370 ❑
- Rear paneling - 800mm (700/900) PNC 206374 ❑
- Rear paneling - 1000mm (700/900) PNC 206375 ❑
- Rear paneling - 1200mm (700/900) PNC 206376 ❑
- Chimney grid net, 400mm (700XP/900) PNC 206400 ❑
- 2 side covering panels for free standing appliances PNC 216134 ❑
- Trolley with lifting & removable tank PNC 922403 ❑
- 2-section universal basket for 150lt boiling pans PNC 925019 ❑
- Water additive against corrosion for indirect boiling pans PNC 927222 ❑
- Pressure regulator for gas units PNC 927225 ❑



The company reserves the right to make modifications to the products without prior notice. All information correct at time of printing.

# Modular Cooking Range Line
# 900XP Gas Cylindrical Boiling Pan
# 150lt indirect heat

Front

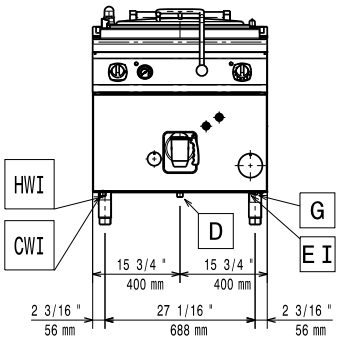


Side

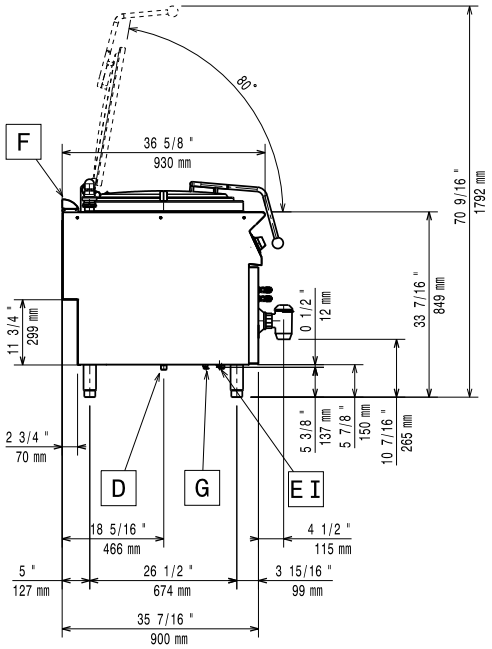


**CWI1 = Cold Water inlet 1** **HWI = Hot water inlet**
**D = Drain**
**EI = Electrical inlet (power)**
**G = Gas connection**

Top

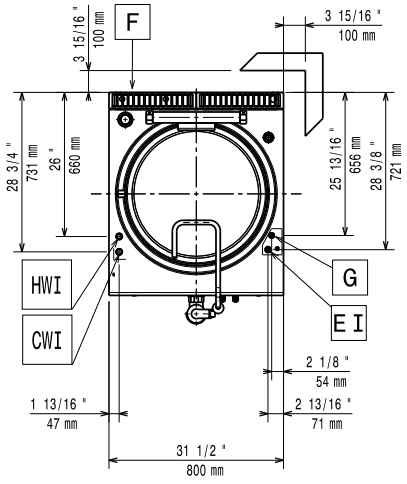


## Electric

| | |
|---|---|
| **Supply voltage:** | |
| **391102 (E9BSGHIRF0)** | 220-230 V/1 ph/50 Hz |
| **Total Watts:** | 0.1 kW |

## Gas

| | |
|---|---|
| **Gas Power:** | 81816 Btu/hr (24 kW) |
| **Standard gas delivery:** | Natural Gas G20 (20mbar) |
| **Gas Type Option:** | LPG;Natural Gas |
| **Gas Inlet:** | 1/2" |

## Key Information:

| | |
|---|---|
| **Pan useful capacity:** | 145 lt |
| **Vessel (round) diameter:** | 600 mm |
| **Net weight:** | 127.5 kg |
| **Shipping weight:** | 150 kg |
| **Shipping height:** | 1240 mm |
| **Shipping width:** | 1120 mm |
| **Shipping depth:** | 860 mm |
| **Shipping volume:** | 1.19 m³ |

No clearance needed on rear sides of unit if wall is of non combustible type. If wall is combustible, minimum 50 mm wall clearance should be maintained.



The company reserves the right to make modifications to the products without prior notice. All information correct at time of printing.

2017.11.17