Electrolux

Modular Cooking Range Line 900XP Gas Cylindrical Boiling Pan 60lt indirect heat

ITEM #

MODEL #

NAME #

SIS #

AIA #



391232 (E9BSGHINF0) 60-lt gas boiling pan, indirect heating

Short Form Specification

Item No.

Suitable for natural gas or LPG. To be installed on cantilever systems but also incorporates fixing points for bridging. Robust burners in stainless steel with flame failure device and protected pilot light. Exterior panels of unit in stainless steel with Scotch Brite finish. Double jacketed lid made in 2mm thick AISI 304 stainless steel. Pressed well bottom with rounded edges manufactured from AISI 316 stainless steel. Right-angled side edges to allow flush-fitting junction between units. Includes safety valve to control working pressure. Temperature limiter for power regulation allowing precise temperature cooking.

Main Features

- Lid and cooking vessel in stainless steel. Sides of vessel with satin finishing for easy cleaning.
- All major compartments located in front of unit for ease of maintenance.
- Easy-to-use control panel.
- Unit delivered with four 50 mm legs in stainless steel as standard (all round Stainless steel kick plates as option).
- Water basins are seamlessly welded into the top of the appliance.
- Water basins in 316 type Stainless steel.
- IPX4 water resistance certification.
- Safety thermostat to avoid operation without water.
- Continuous water filling regulated through a manual water tap.
- Large drain with manual ball-valve for fast emptying of well.
- Appliance is IPX5 water resistance certified.
- Closed heating system – no waste of energy.
- Discharge tube and tap are very easy to clean from outside.
- Ergonomic: the depth of the vessel facilitates stirring the food, also the most delicate food.
- External valve allows to manually evacuate excess air accumulated in the jacket during heating phase.
- Firmly fitting cover to reduce cooking time and save energy costs.
- Pressed cooking vessel and lid in 316 AISI Stainless steel.
- Large capacity food tap enables safe and effortless discharging of contents.
- Manometer allows to correctly control the functioning of the pan.
- No overshooting of cooking temperatures, fast reaction.
- Pressure switch control monitors energy and water consumption.
- Produce is uniformly heated in the base and side walls of the kettle by an indirect heating system that uses integrally generated saturated steam at a temperature of 110° C in the jacket.
- Round kettle is suitable to cook, sauté or poach all kinds of produce.
- Safety thermostat protects against low water level.
- Safety valve avoids overpressure of the steam in the jacket.
- Solenoid valve to refill with hot and cold water.
- The special design of the control knob system guarantees against water infiltration.
- Energy regulation through a control knob.
- Heavy duty internal frame in Stainless steel.
- Right angled side edges eliminate gaps and possible dirt traps between units.

APPROVAL:

Electrolux

Modular Cooking Range Line
900XP Gas Cylindrical Boiling Pan 60lt indirect heat

Modular Cooking Range Line
900XP Gas Cylindrical Boiling Pan 60lt indirect heat

Construction

- All exterior panels in Stainless Steel with Scotch Brite finishing.
- Model has right-angled side edges to allow flush fitting joints between units, eliminating gaps and possible dirt traps.
- AISI 304 stainless steel worktop, 2mm thick.
- Stainless steel top provides a heavy duty work surface under any load.
- Robust burners in stainless steel with flame failure device, protected pilot light and optimized combustion.

Included Accessories

• 1 of Water additive against corrosion for indirect boiling pans	PNC 927222

Optional Accessories

• Junction sealing kit	PNC 206086 ❑
• Draught diverter, 150 mm diameter	PNC 206132 ❑
• Matching ring for flue condenser, 150 mm diameter	PNC 206133 ❑
• Kit 4 wheels - 2 swivelling with brake - it is mandatory to install base support and wheels	PNC 206135 ❑
• Flanged feet kit	PNC 206136 ❑
• Frontal kicking strip for concrete installation, 800mm	PNC 206148 ❑
• Frontal kicking strip for concrete installation, 1000mm	PNC 206150 ❑
• Frontal kicking strip for concrete installation, 1200mm	PNC 206151 ❑
• Frontal kicking strip for concrete installation, 1600mm	PNC 206152 ❑
• Frontal kicking strip, 800mm (not for refr-freezer base)	PNC 206176 ❑
• Frontal kicking strip, 1000mm (not for refr-freezer base)	PNC 206177 ❑
• Frontal kicking strip, 1200mm (not for refr-freezer base)	PNC 206178 ❑
• Frontal kicking strip, 1600mm (not for refr-freezer base)	PNC 206179 ❑
• Pair of side kicking strips (not for refr-freezer base)	PNC 206180 ❑
• 2 panels for service duct for single installation	PNC 206181 ❑
• 2 panels for service duct for back to back installation	PNC 206202 ❑
• Kit 4 feet for concrete installation (not for 900 line free standing grill)	PNC 206210 ❑
• Flue condenser for 1 module, 150 mm diameter	PNC 206246 ❑
• Chimney upstand, 800mm	PNC 206304 ❑
• Base support for feet or wheels - 800mm (700/900)	PNC 206367 ❑
• Chimney grid net, 400mm (700XP/900)	PNC 206400 ❑
• 2 side covering panels for free standing appliances	PNC 216134 ❑
• 1-section noodle basket for 60lt boiling pans	PNC 921626 ❑
• Water additive against corrosion for indirect boiling pans	PNC 927222 ❑
• Pressure regulator for gas units	PNC 927225 ❑

The company reserves the right to make modifications to the products without prior notice. All information correct at time of printing.

2017.12.06

Modular Cooking Range Line
900XP Gas Cylindrical Boiling Pan
60lt indirect heat

Front

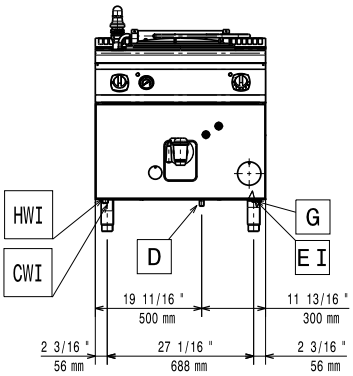

Side

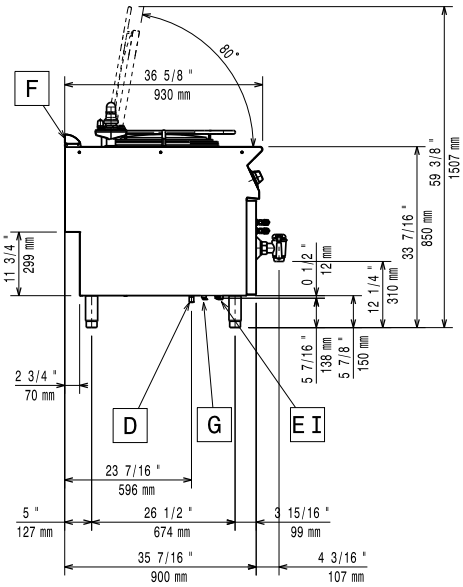

CWI1 = **Cold Water inlet 1** **HWI** = **Hot water inlet**
D = **Drain**
EI = **Electrical inlet (power)**
G = **Gas connection**

Top

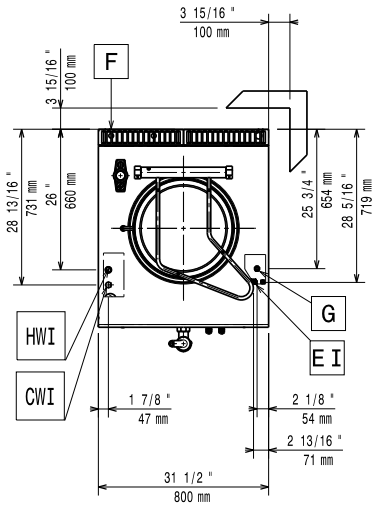

Electric

Supply voltage:	
391232 (E9BSGHINF0)	230 V/1N ph/50 Hz
Total Watts:	0.1 kW

Gas

Gas Power:	47726 Btu/hr (14 kW)
Standard gas delivery:	Natural Gas G20 (20mbar)
Gas Type Option:	LPG;Natural Gas
Gas Inlet:	1/2"

Key Information:

Net weight:	115 kg
Shipping weight:	140 kg
Shipping height:	1180 mm
Shipping width:	880 mm
Shipping depth:	1140 mm
Shipping volume:	1.18 m³

No clearance needed on rear sides of unit if wall is of non combustible type. If wall is combustible, minimum 50 mm wall clearance should be maintained.

The company reserves the right to make modifications to the products without prior notice. All information correct at time of printing.

2017.12.06