Electrolux

Modular Cooking Range Line
900XP Gas Cylindrical Boiling Pan
150lt direct heat

ITEM #

MODEL #

NAME #

SIS #

AIA #



Modular Cooking Range Line

900XP Gas Cylindrical Boiling Pan 150lt direct heat

391107 (E9BSGHDRF0)	150-lt gas boiling pan, direct heating

Short Form Specification

Item No.

Suitable for natural gas or LPG. To be installed on cantilever systems but also incorporates fixing points for bridging. Robust burners in stainless steel with flame failure device and protected pilot light. Exterior panels of unit in stainless steel with Scotch Brite finish. Pressed well with rounded edges manufactured from AISI 316 stainless steel. Right-angled side edges to allow flush-fitting junction between units.

APPROVAL:

Main Features

- Round kettle is suitable to cook, sauté or poach all kinds of produce.
- Produce is uniformly heated in the base and side walls of the kettle by a direct heating system.
- Appliance is IPX5 water resistance certified.
- Energy regulation through a control knob.
- No overshooting of cooking temperatures, fast reaction.
- Large capacity food tap enables safe and effortless discharging of contents.
- Firmly fitting cover to reduce cooking time and save energy costs.
- Ergonomic: the depth of the vessel facilitates stirring the food, also the most delicate food.
- Discharge tube and tap are very easy to clean from outside.
- Solenoid valve to refill with hot and cold water.
- Smooth large surfaces, easy access for cleaning.
- The special design of the control knob system guarantees against water infiltration.

Construction

- Pressed cooking vessel and double jacket in 316 AISI Stainless steel.
- Robust burners in stainless steel with flame failure device, protected pilot light and optimized combustion.
- All exterior panels in Stainless Steel with Scotch Brite finishing.
- Model has right-angled side edges to allow flush fitting joints between units, eliminating gaps and possible dirt traps.

Optional Accessories

• Junction sealing kit	PNC 206086 ❑
• Draught diverter, 150 mm diameter	PNC 206132 ❑
• Matching ring for flue condenser, 150 mm diameter	PNC 206133 ❑
• Kit 4 wheels - 2 swivelling with brake - it is mandatory to install base support and wheels	PNC 206135 ❑
• Flanged feet kit	PNC 206136 ❑
• Frontal kicking strip for concrete installation, 800mm	PNC 206148 ❑
• Frontal kicking strip for concrete installation, 1000mm	PNC 206150 ❑
• Frontal kicking strip for concrete installation, 1200mm	PNC 206151 ❑
• Frontal kicking strip for concrete installation, 1600mm	PNC 206152 ❑
• Pair of side kicking strips for concrete installation	PNC 206157 ❑

Electrolux

Modular Cooking Range Line
900XP Gas Cylindrical Boiling Pan 150lt direct heat

• Frontal kicking strip, 800mm (not for refr-freezer base)	PNC 206176 ❑
• Frontal kicking strip, 1000mm (not for refr-freezer base)	PNC 206177 ❑
• Frontal kicking strip, 1200mm (not for refr-freezer base)	PNC 206178 ❑
• Frontal kicking strip, 1600mm (not for refr-freezer base)	PNC 206179 ❑
• Pair of side kicking strips (not for refr-freezer base)	PNC 206180 ❑
• 2 panels for service duct for single installation	PNC 206181 ❑
• 2 panels for service duct for back to back installation	PNC 206202 ❑
• Kit 4 feet for concrete installation (not for 900 line free standing grill)	PNC 206210 ❑
• Flue condenser for 1 module, 150 mm diameter	PNC 206246 ❑
• Chimney upstand, 800mm	PNC 206304 ❑
• Base support for feet or wheels - 800mm (700/900)	PNC 206367 ❑
• Base support for feet or wheels - 1200mm (700/900)	PNC 206368 ❑
• Base support for feet or wheels - 1600mm (700/900)	PNC 206369 ❑
• Base support for feet or wheels - 2000mm (700/900)	PNC 206370 ❑
• Rear paneling - 800mm (700/900)	PNC 206374 ❑
• Rear paneling - 1000mm (700/900)	PNC 206375 ❑
• Rear paneling - 1200mm (700/900)	PNC 206376 ❑
• Chimney grid net, 400mm (700XP/900)	PNC 206400 ❑
• 2 side covering panels for free standing appliances	PNC 216134 ❑
• Trolley with lifting & removable tank	PNC 922403 ❑
• 2-section universal basket for 150lt boiling pans	PNC 925019 ❑
• Pressure regulator for gas units	PNC 927225 ❑

The company reserves the right to make modifications to the products without prior notice. All information correct at time of printing.

Modular Cooking Range Line
900XP Gas Cylindrical Boiling Pan
150lt direct heat

Front

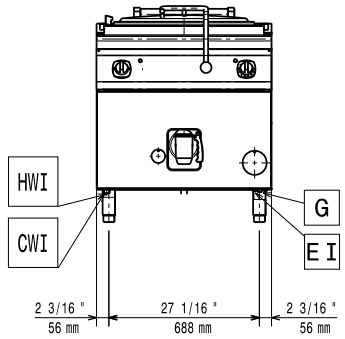

Top

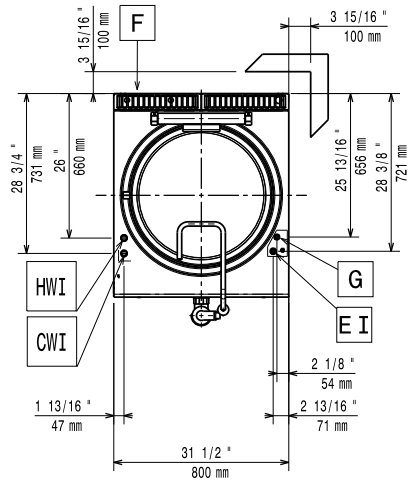

CWI1 = Cold Water inlet 1
EI = Electrical inlet (power)
G = Gas connection
HWI = Hot water inlet

Side

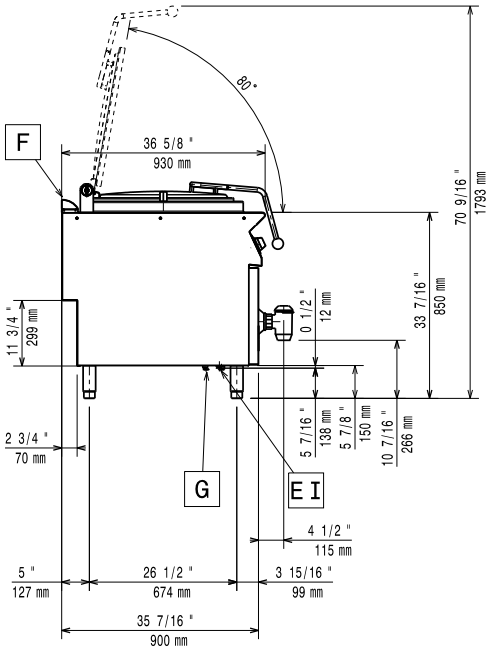

Electric

Supply voltage:	
391107 (E9BSGHDRF0)	220-230 V/1 ph/50 Hz
Total Watts:	0.1 kW

Gas

Gas Power:	81816 Btu/hr (24 kW)
Standard gas delivery:	Natural Gas G20 (20mbar)
Gas Type Option:	LPG;Natural Gas
Gas Inlet:	1/2"

Key Information:

Pan useful capacity:	145 lt
Vessel (round) diameter:	600 mm
Net weight:	102 kg
Shipping weight:	110 kg
Shipping height:	1120 mm
Shipping width:	1120 mm
Shipping depth:	860 mm
Shipping volume:	1.08 m³

No clearance needed on rear sides of unit if wall is of non combustible type. If wall is combustible, minimum 50 mm wall clearance should be maintained.

The company reserves the right to make modifications to the products without prior notice. All information correct at time of printing.

2017.06.23