Electrolux

Modular Cooking Range Line 700XP Freestanding Gas Boiling Pan 60lt direct heat

ITEM #

MODEL #

NAME #

SIS #

AIA #



371271 (E7BSGHDNF0) 60-lt direct gas boiling pan

Short Form Specification

Item No.

To be installed on height adjustable feet in stainless steel. Suitable for natural gas or LPG. Robust burners in stainless steel with flame failure device and protected pilot light. Thermostatic temperature control for power regulation allowing precise temperature cooking. Exterior panels in stainless steel with Scotch Brite finish. One piece pressed work top in 1.5 mm thick stainless steel. Right-angled side edges to allow flush-fitting junction between units.

APPROVAL:

Main Features

Main Features

- Kettle is suitable to cook, sauté or poach all kinds of produce.
- Produce is uniformly heated in the base and side walls of the kettle by a direct heating system.
- Pressed cooking vessel and lid in 316 AISI Stainless steel.
- Robust burners in stainless steel with flame failure device, protected pilot light and optimized combustion.
- Appliance is IPX4 water resistance certified.
- Solenoid valve to refill with hot and cold water.
- Safety valve avoids overpressure of the steam in the jacket.
- No overshooting of cooking temperatures, fast reaction.
- Large capacity drain tap enables precise portioning of the discharged food, especially small quantities.
- Firmly fitting cover to reduce cooking time and save energy costs.
- Ergonomic: unique ratio vessel diameter and height; depth facilitates stirring and gentle food handling.
- Discharge tube and tap are very easy to clean from outside.
- Smooth large surfaces, easy access for cleaning.
- Exterior panels in Stainless Steel with Scotch Brite finish.
- One piece pressed 1.5 mm work top in Stainless steel.
- Model has right-angled side edges to allow flush fitting joints between units, eliminating gaps and possible dirt traps.
- Unit delivered with four 50 mm legs in stainless steel as standard (all round Stainless steel kick plates as option).

Construction

- Robust burners in stainless steel with flame failure device, protected pilot light and optimized combustion.
- All exterior panels in Stainless Steel with Scotch Brite finishing.
- One piece pressed 1.5 mm work top in Stainless steel.
- Model has right-angled side edges to allow flush fitting joints between units, eliminating gaps and possible dirt traps.

Optional Accessories

- Junction sealing kit PNC 206086 ❑
- Draught diverter, 150 mm diameter PNC 206132 ❑
- Matching ring for flue condenser, 150 mm diameter PNC 206133 ❑

Electrolux

Modular Cooking Range Line 700XP Freestanding Gas Boiling Pan 60lt direct heat

- Kit 4 wheels - 2 swivelling with brake - it is mandatory to install base support and wheels PNC 206135 ❑
- Flanged feet kit PNC 206136 ❑
- Frontal kicking strip for concrete installation, 400mm PNC 206147 ❑
- Frontal kicking strip for concrete installation, 800mm PNC 206148 ❑
- Frontal kicking strip for concrete installation, 1000mm PNC 206150 ❑
- Frontal kicking strip for concrete installation, 1200mm PNC 206151 ❑
- Frontal kicking strip for concrete installation, 1600mm PNC 206152 ❑
- Frontal kicking strip, 800mm (not for refr-freezer base) PNC 206176 ❑
- Frontal kicking strip, 1000mm (not for refr-freezer base) PNC 206177 ❑
- Frontal kicking strip, 1200mm (not for refr-freezer base) PNC 206178 ❑
- Frontal kicking strip, 1600mm (not for refr-freezer base) PNC 206179 ❑
- Kit 4 feet for concrete installation (not for 900 line free standing grill) PNC 206210 ❑
- Flue condenser for 1 module, 150 mm diameter PNC 206246 ❑
- Pair of side kicking strips PNC 206249 ❑
- Pair of side kicking strips for concrete installation PNC 206265 ❑
- Chimney upstand, 800mm PNC 206304 ❑
- Right and left side handrails PNC 206307 ❑
- Back handrail 800mm, Marine PNC 206308 ❑
- Base support for feet or wheels - 400mm (700/900) PNC 206366 ❑
- Base support for feet or wheels - 800mm (700/900) PNC 206367 ❑
- Base support for feet or wheels - 1200mm (700/900) PNC 206368 ❑
- Base support for feet or wheels - 1600mm (700/900) PNC 206369 ❑
- Base support for feet or wheels - 2000mm (700/900) PNC 206370 ❑
- Rear paneling - 800mm (700/900) PNC 206374 ❑
- Rear paneling - 1000mm (700/900) PNC 206375 ❑
- Rear paneling - 1200mm (700/900) PNC 206376 ❑
- 2 side covering panels for free standing appliances PNC 216000 ❑
- Frontal handrail, 800mm PNC 216047 ❑
- Frontal handrail, 1200mm PNC 216049 ❑
- Large handrail - portioning shelf, 800mm PNC 216186 ❑
- 1-section noodle basket for 60lt boiling pans PNC 921626 ❑
- Trolley with lifting & removable tank PNC 922403 ❑
- Pressure regulator for gas units PNC 927225 ❑

The company reserves the right to make modifications to the products without prior notice. All information correct at time of printing.

Modular Cooking Range Line 700XP Freestanding Gas Boiling Pan 60lt direct heat

Front

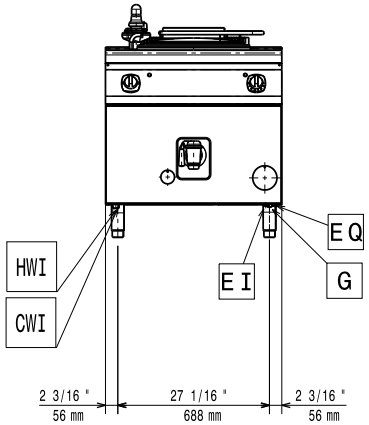

Side

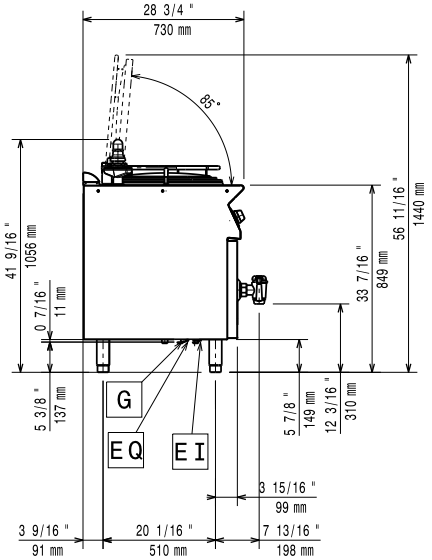

CWI1 = Cold Water inlet 1
D = Drain
EI = Electrical inlet (power)
G = Gas connection
HWI = Hot water inlet

Top

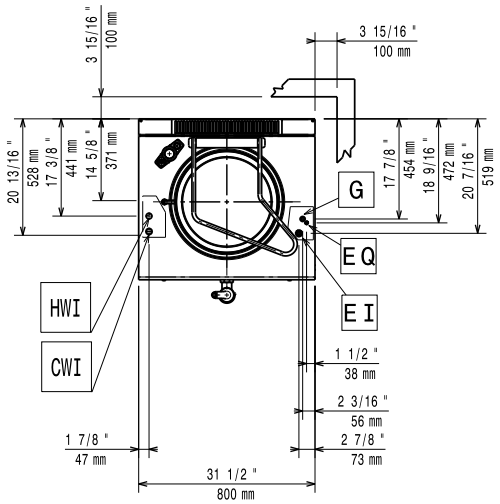

Electric

Supply voltage:	
371271 (E7BSGHDNF0)	230 V/1N ph/50 Hz
Total Watts:	0.1 kW

Gas

Gas Power:	47726 Btu/hr (14 kW)
Standard gas delivery:	Natural Gas G20 (20mbar)
Gas Type Option:	LPG
Gas Inlet:	1/2"

Key Information:

Pan useful capacity:	60 lt
Vessel (round) diameter:	420 mm
Net weight:	95 kg
Shipping weight:	110 kg
Shipping height:	1140 mm
Shipping width:	820 mm
Shipping depth:	860 mm
Shipping volume:	0.8 m³

No clearance needed on rear sides of unit if wall is of non combustible type. If wall is combustible, minimum 50 mm wall clearance should be maintained.

The company reserves the right to make modifications to the products without prior notice. All information correct at time of printing.

2017.11.17