PROFESSIONAL DISHWASHERS

competence that you can trust...



www.oztiryakiler.com.tr



Öztiryakiler, a leader in Industrial Kitchen and Catering Equipment was established in the late 50's as a family business. It was through success, quality and motivation that Öztiryakiler has grown rapidly and became a reliable supplier for professional kitchens, cafeterias, restaurants, bars, military buildings, hospitals and catering companies...etc

Today, Öztiryakiler manufactures and exports more than 4500 different kind of high quality professional kitchen appliances and equipments to over 105 countries. From preparation to cooking equipments, carrying to display units and from hot-cold lines to working benches-dishwashers, Öztiryakiler offers different solutions and complete commercial kitchen design services for its esteemed customers worldwide.

2000 internationally acknowledged product & product group certifications, 125.000m^2 production area, over 1200 employees, widespread sales, aftersales technical services, advanced R&D, engineerings specialists and above all, with over 50 years of experience Öztiryakiler takes an innovative approach, by aiming to save operator's space, time and money.

PERFORMANCE



- Ozti Dishwasher Technology - Reliable, Safe and easy to use.
- Ozti Dishwasher guarantee the highest hygenie level.
- Less consumption of water, energy and detergent.



GLASSWASHER

OBY 500 B



UNDERCOUNTER

OBY 500
OBY 500 E
OBY 500 PLUS



UNDERCOUNTER - DIGITAL

OBY 500 D

EFFECTIVE WASHING

- Sparkling cleaning results.
- Selectable washing programs to deal with any kind of dirt the most efficient way.
- Upper and lower washing arms designed for most efficient cleaning.
- Nozzles are designed to perform an effective distrubution of water.

RELIABLE AND SAFE

- Stainless steel structure and main components to ensure durability and hygene.
- Strong construction allowing absolute reliability and long life.
- Electrical components and cabling according to international standarts and security regulations.
- Non-return - check valve system.

EASY TO USE

- Electronic control panel
- User friendly interface

EASY INSTALLATION AND SERVICE

- Easy and quick installation on site by service engineers
- Easy to access internal components by removing back panel

EASY TO CLEAN

- Deep drawn washing tank with round ed corners.
- Removable washing and rinsing arms (both in stainless steel and plastic) for daily maintenance operations

TECHNOLOGY



UTENSIL WASHER
OKY



HOODTYPE DISHWASHER
OBM 1080
OBO 1000 EKO



CONVEYOR DISHWASHER
OBK 1500



CONVEYOR DISHWASHER
OBK 2000

OBY 500 B

GLASSWASHER



OBY 500 B
GLASSWASHER

FEATURES

- Stainless Steel Body incluting washing and boiler tank
- Hygenic washing tank
- 30 racks per hour (Rack dimension 35 x 35)
- 2.5 l water consumption per cycle
- Automayic, user friendly control panel
- 1 Washing Programme - Cycle 120 seconds
- Saves energy, detergent and water
- Washing arms in reinforced polypropylene
- Adjustable feet for height optimization
- Easy start up: one button to fill in and heat water in the boiler tank
- Electrical components and cabling according to international standarts and security regulations.
- Completely sealed body to guarantee IPX5 water protection
- Thermostat-controlled rinse and washing temparature for efficient washing
- Non-return - Check valve System
- Washing temperature at 55-60°C (water supply at a minimum of 2 bar and 50°C
- Rinsing temperature at 80-85°C (water supply at a minimum of 2 bar and 50°C)



STANDART EQUIPMENT

- Rinse Aid Dispenser
- 1 Glass Rack Promotional with cutlery and cup holders
- Electrical Connection Cable, Flexible Water Supply and Drain Hose
- Free Spare Part Kit

OPTIONAL EQUIPMENT

- Detergent Dispenser
- Drain Pump

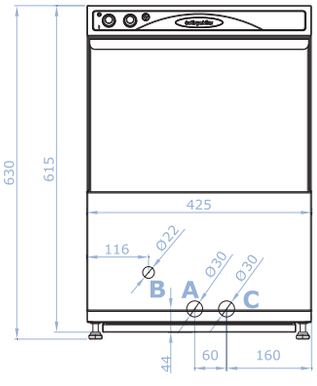

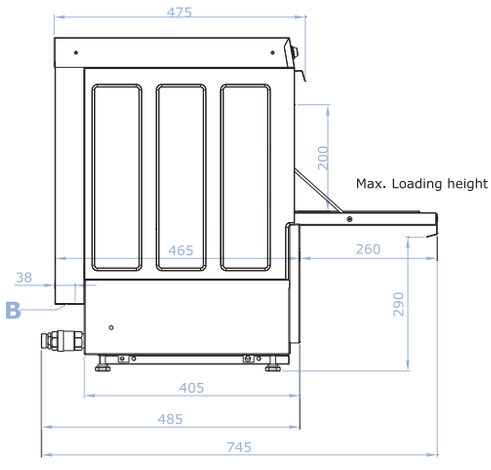

A: Water inlet
B: Electric connection
C: Drain







Technical Features

Code	0710.00500.02	Washing pump power	0.27 kW
Total load	3.3 kW	Rinsing pump power	-
Electric connection	230V~NPE / 50Hz	Water inlet pressure / Temp.	2-4 Bar / 35-45 °C
Washing capacity (Plate/hr)	500 glass / bardak	Heat power (Washing/Rinsing)	2 / 3 kW
Washing capacity (Basket/hr)	3 0	Dirty water discharge connection	3/4" (28 mm)
Washing / Boiler tank capacity	9.2 / 2.8 lt.	Max. noise	85 dBA
Washing water temp.	55-60°C	Gross weight	35 (±5) kg
Rinsing water temp.	80-85 °C (max.)	Dimensions (LxWxD)	420x450x620 mm
Washing program number	1	Protection class	IPX5
Water inlet connectio	3/4 "	Rack dimension	35 x 35 cm
		Loading height	20 cm

OBY 500 D

DISHWASHER



OBY 500 D
DISHWASHER

FEATURES

- Stainless Steel Body incluting washing and boiler tank
- Hygenic washing tank
- 30 racks per hour (Rack dimension 35 x 35)
- 2.5 l water consupmtion per cycle
- Automayic, user friendly control panel
- Temperature Indication on front panel
- 5 Selectable Washing Programmes
- Saves energy, detergent and water
- Washing arms both available in stainless steel and reinforced polypropylene
- Adjustable feet for height optimization
- Easy start up: one button to fill in and heat water in the boiler tank
- Electrical components and cabling according to international standarts and security regulations.
- Completely sealed body to guarantee IPX5 water protection
- Thermostat-controlled rinse and washing temparature for efficient washing
- Non-return - Check valve System
- Washing temperature at 55-60°C (water supply at a minimum of 2 bar and 50°C
- Rinsing temperature at 80-85°C (water supply at a minimum of 2 bar and 50°C



STANDART EQUIPMENT

- Rinse Aid Dispenser
- Rinsing Pump
- 3 Baskets Promotional (Plate, Glass and Cutlery)
- Electrical Connection Cable, Flexible Water Supply and Drain Hose
- Free Spare Part Kit

OPTIONAL EQUIPMENT

- Stainless Steel Washing Arms
- Detergent Dispenser
- Drain Pump

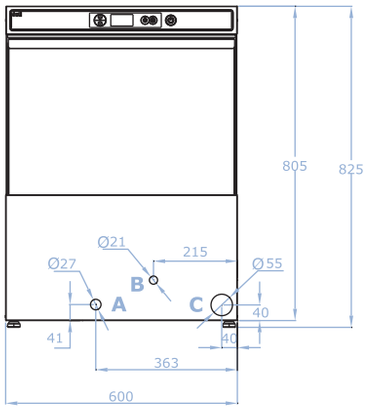

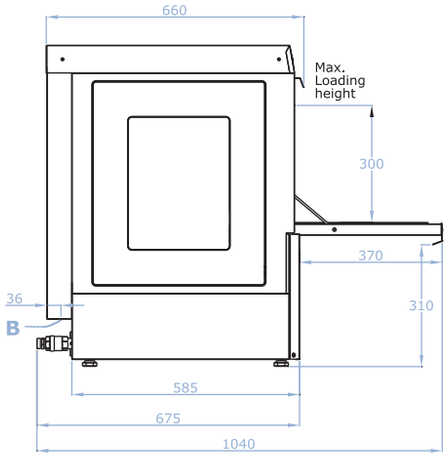

A: Water inlet
B: Electric connection
C: Drain







Technical Features

Code	0710.00500.05	Water inlet presure / Temp.	2-4 Bar / 50°C
Total load	220 - 240V / 50 Hz	Heat power (Washing/Rinsing)	2/5 kw
Total rating	5.5 kW	Dirty water discharge connection	1 1/4 (Ø 42 mm.)
Washing capacity (Plate/hr)	560 (max.)	Max. noise	85 dBA
Washing / Boiler tank capacity	30 / 6lt.	Gross weight	75 (±5) kg
Washing water temp.	55-60 °C	Dimensions (LxWxD)	600x670x820 mm
Rinsing water temp.	80-85 °C (max.)	Protection class	IP X5
Washing program number	5	Inclination	6 °
Water inlet connection	3/4 “	Rack dimension	30 x 50 cm
Washing pump power	0.66 kW	Loading height	30 cm

OBY 500

DISHWASHER

OBY 500 E / OBY 500 PLUS



OBY 500 E / OBY 500 PLUS / OBY 500
DISHWASHER

FEATURES

- Stainless Steel Body incluting washing and boiler tank
- Hygenic washing tank
- 30 racks per hour (Rack dimension 35 x 35)
- 2.8 l water consumption per cycle
- Automayic, user friendly control panel
- 2 Washing Programme - - Cycle 102-192 seconds
- Saves energy, detergent and water
- Washing arms both available in stainless steel and reinforced polypropylene
- Adjustable feet for height optimization
- Easy start up: one button to fill in and heat water in the boiler tank
- Electrical components and cabling according to international standarts and security regulations.
- Completely sealed body to guarantee IPX5 water protection
- Thermostat-controlled rinse and washing temparature for efficient washing
- Non-return - Check valve System
- Washing temperature at 55-60°C (water supply at a minimum of 2 bar and 50°C)
- Rinsing temperature at 80-85°C (water supply at a minimum of 2 bar and 50°C)



STANDART EQUIPMENT	OBY 500	OBY 500 E	OBY 500 PLUS
Detergent Dispenser	OPT	OPT	✓
Rinse Aid Dispenser	✓	✓	✓
Rinsing Pump	✓	N / A	✓
Drain Pump	OPT	OPT	✓
3 Baskets Promotional (Plate, Glass and Cutlery)	✓	✓	✓
Electrical Connection Cable, Flexible Water Supply and Drain Hose	✓	✓	✓
Free Spare Part Kit	✓	✓	✓
Stainless Steel Washing Arms	OPT	OPT	OPT

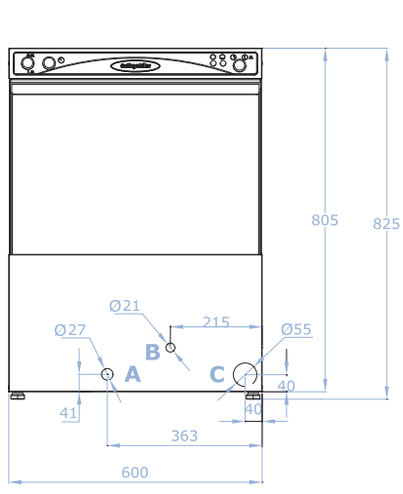

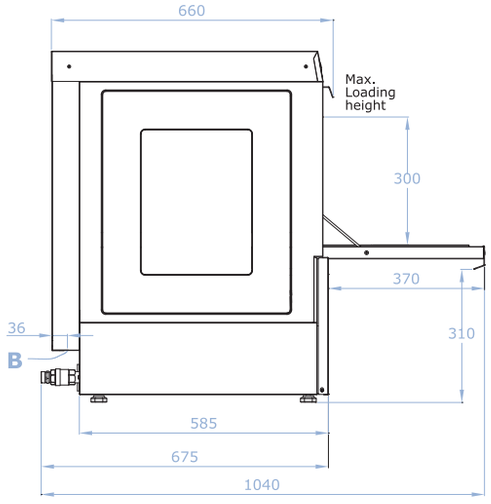

A: Water inlet
B: Electric connection
C: Drain







OBY 500 /OBY 500 E / OBY 500 PLUS
DISHWASHER

Technical Features	OBY 500		
Code	0710.00500.01	Washing pump power	0.66 kW
Total load	5.5 kW	Rinsing pump power	0.37 kW
Electric connection	230V~NPE / 50Hz	Water inlet pressure / Temp.	2-4 Bar / 50°C
Washing capacity (Plate/hr)	560 (max.)	Heat power (Washing/Rinsing)	2 / 5 kW
Washing capacity (Basket/hr)	35	Dirty water discharge connection	1 1/4" (42 mm)
Washing / Boiler tank capacity	30 / 6lt.	Max. noise	85 dBA
Washing water temp.	55-60 °C	Gross weight	75 (±5) kg
Rinsing water temp.	80-85 °C (max.)	Dimensions (LxWxD)	600x670x820 mm
Washing program number	2	Protection class	IPX5
Water inlet connection	3/4 "	Rack dimension	50 x 50 cm
		Loading height	30 cm

Technical Features	OBY 500 E		
Code	0710.00500.00	Washing pump power	0.66 kW
Total load	5.5 kW	Rinsing pump power	-
Electric connection	230V~NPE / 50Hz	Water inlet pressure / Temp.	2-4 Bar / 50 °C
Washing capacity (Plate/hr)	560 (max.)	Heat power (Washing/Rinsing)	2 / 5 kW
Washing capacity (Basket/hr)	35	Dirty water discharge connection	1 1/4" (42 mm)
Washing / Boiler tank capacity	30 / 6lt.	Max. noise	85 dBA
Washing water temp.	55-60 °C	Gross weight	70 (±5) kg
Rinsing water temp.	80-85 °C (max.)	Dimensions (LxWxD)	600x670x820 mm
Washing program number	2	Protection class	IPX5
Water inlet connection	3/4 "	Rack dimension	50 x 50 cm
		Loading height	30 cm

Technical Features	OBY 500 PLUS		
Code	0710.00500.03	Washing pump power	0.66 kW
Total load	5.5 kW	Rinsing pump power	0.37 kW
Electric connection	230V~NPE / 50Hz	Water inlet pressure / Temp.	2-4 Bar / 50°C
Washing capacity (Plate/hr)	560 (max.)	Heat power (Washing/Rinsing)	2 / 5 kW
Washing capacity (Basket/hr)	35	Dirty water discharge connection	1 1/4" (42 mm)
Washing / Boiler tank capacity	30 / 6lt.	Max. noise	85 dBA
Washing water temp.	55-60 °C	Gross weight	75 (±5) kg
Rinsing water temp.	80-85 °C (max.)	Dimensions (LxWxD)	600x670x820 mm
Washing program number	2	Protection class	IPX5
Water inlet connection	3/4 "	Rack dimension	50 x 50 cm
		Loading height	30 cm





OBM 1080/OBO 1000 EKO

HOODTYPE DISHWASHER



OBO 1000 EKO/OBM 1080

HOODTYPE DISHWASHER

FEATURES

- Stainless Steel Body incluting washing and boiler tank
- Monoblock washing tank with round corners - Hygenic
- 69 racks per hour for OBM 1080
- 50 racks per hour for OBO 1000 EKO
- 2.8 l water consumption per cycle
- OBO 1000 EKO: 1 Selectable Washing Programmes - Cycle 72 seconds
- OBM 1080: 3 Selectable Washing Programmes - Cycle 52,102,132 seconds
- Suitable for corner or in-line installation
- Easy to use electronic control panel
- Washing arms both available in stainless steel and reinforced polypropylene
- Adjustable feet for height optimization
- Easy start up: one button to fill in and heat water in the boiler tank
- Electrical components and cabling according to international standarts and security regulations.
- The dishwasher is completely sealed to guarantee IPX5 water protection
- Thermostat-controlled rinse and washing temparature for efficient washing
- Non-return - Check valve System
- Washing temperature at 55-60°C (water supply at a minimum of 2 bar and 50°C)
- Rinsing temperature at 80-85°C (water supply at a minimum of 2 bar and 50°C)



STANDART EQUIPMENT	OBO 1000 EKO	OBM 1080
Rinsing Pump	N / A	✓
3 Baskets Promotional (Plate, Glass and Cutlery)	✓	✓
Electrical Connection Cable, Flexible Water Supply and Drain Hose	✓	✓
Free Spare Part Kit	✓	✓

OPTIONAL EQUIPMENT

- Stainless Steel Washing Arms
- Detergent Dispenser
- Rinse Aid Dispenser
- Drain Pump

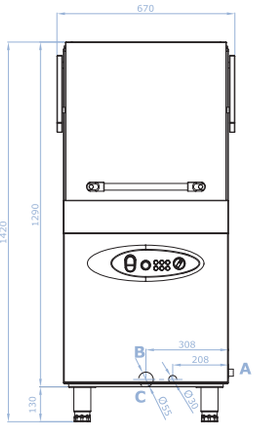

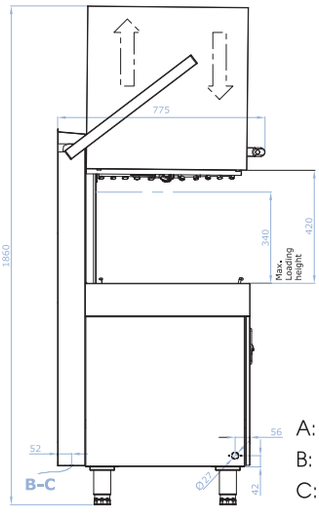

A: Waterinlet
B: Electric connection
C: Drain



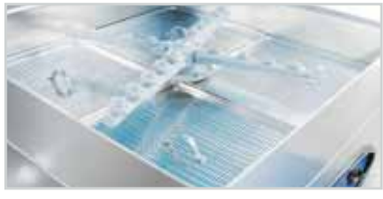



Technical Features	OBM 1080
Code	0710.01080.00
Electric connection	400V ~ 3NPE / 50Hz.
Total rating	10 kW
Washing capacity (Plate/hr)	1080 (max.)
Washing capacity (Basket/hr)	69
Washing / Boiler tank capacity	37 / 7lt.
Washing water temp.	55-60 °C
Rinsing water temp.	80-85 °C (max.)
Washing program number	3
Water inlet connection	3/4 “
Washing pump power	0.66 kw
Rinsing pump power	0.37 kw
Water inlet pressure / Temp.	2-4 Bar / 50°C
Heat power (Washing/Rinsing)	3 /9 kw
Dirty water discharge connection	11/4” (42 mm)
Max. noise	85 dBA
Gross weight	115 (±5) kg
Dimensions (LxWxD)	670x785x1420(1860) mm
Protection class	IPX5
Rack dimension	50 x 50 cm
Loading height	34 cm

Technical Features	OBO 1000 EKO
Code	0710.EKO10.00
Electric connection	400V ~ 3NPE / 50Hz.
Total rating	8.3 kW
Washing capacity (Plate/hr)	750 (max.)
Washing capacity (Basket/hr)	50
Washing / Boiler tank capacity	37 / 7lt.
Washing water temp.	55-60 °C
Rinsing water temp.	80-85 °C (max.)
Washing program number	1
Water inlet connection	3/4 “
Washing pump power	0.66 kw
Rinsing pump power	-
Water inlet pressure / Temp.	2-4 Bar / 50 °C
Heat power (Washing/Rinsing)	3 / 7.5 kw
Dirty water discharge connection	11/4” (42 mm)
Max. noise	85 dBA
Gross weight	110 (±5) kg
Dimensions (LxWxD)	670x785x1420(1860) mm
Protection class	IPX5
Rack dimension	50 x 50 cm
Loading height	34 cm

OBK 1500

CONVEYOR DISHWASHER



OBK 1500
CONVEYOR DISHWASHER

FEATURES

- Stainless Steel Body incluting washing and boiler tank
- Hygenic washing tank
- 100 racks per hour (Rack dimension 50 x 50)
- Effective drying through a high powered fan
- 3 l water consumption per cycle
- Automayic, user friendly control panel
- Continuous Washing through Conveyor System with dryer
- Saves energy, detergent and water
- Stainless steel washing arms
- Adjustable feet for height optimization

  Easy start up: one button to fill in and heat water in the boiler tank
- Electrical components and cabling according to international standarts and security regulations.
- Completely sealed to guarantee IPX5 water protection Thermostat-controlled rinse and washing temparature for efficient washing
- Non-return - Check valve System
- Washing temperature at 55-60°C (water supply at a minimum of 2 bar and 50°C)
- Rinsing temperature at 80-85°C (water supply at a minimum of 2 bar and 50°C)



STANDART EQUIPMENT

- Stainless Steel Washing Arms
- Rinsing Pump
- 5 Baskets Promotional (3x Plate, 1x Glass and 1x Cutlery)
- Electrical Connection Cable,
- Flexible Water Supply and Drain Hose Free Spare Part Kit

OPTIONAL EQUIPMENT

- Drain Pump
- Detergent Dispenser
- Rinse Aid Dispenser

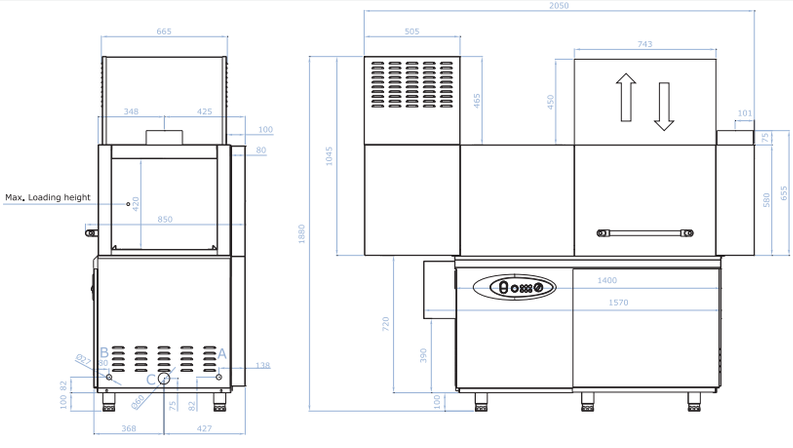

A: Waterinlet
B: Electric connection
C: Drain

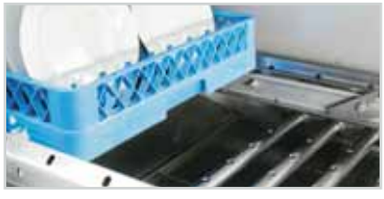





Technical Features

Electricty connection	400V~3NPE / 50Hz	Reductor power	0.25 kW
Total load	47 kW	Drying fan power	0.55 kW
Washing capacity (Plate/hr)	1650 (max.)	Heat power (Wash/Rins/Dry)	9 kW- 27 kW - 8 kW
Washing capacity (Basket/hr)	100	Dirty water discharge connection	1 1/4" (42 mm)
Main washing tank capacity	90 lt (max).	Max.noise	85 dBA
Boiler tank capacity	18 lt	Gross weight	220 kg
Washing water temp.	55-60 °C	Dimensions(LxWxD)	800x2050x1880 mm
Rinsing water temp.	80-85 °C	Max.slope	6°
Water inlet connection	3/4 "	Production class	IPX5
Pump power(main washing/rinsing)	1.5 kW/0.37kW	Rack dimension	50 x 50 cm
Water inlet pressure / Temp.	2-4 Bar / 50 °C	Loading height	42 cm

OBK 2000

CONVEYOR DISHWASHER



OBK 2000
CONVEYOR DISHWASHER

FEATURES

- Stainless Steel Body incluting washing and boiler tank
- Hygenic washing tank
- 133 racks per hour (Rack dimension 50 x 50)
- Effective drying through a high powered fan
- 3 l water consumption per cycle
- Automayic, user friendly control panel
- Continuous Washing through Conveyor System with dryer
- Saves energy, detergent and water
- Stainless steel washing arms
- Adjustable feet for height optimization
  Easy start up: one button to fill in and heat water in the boiler tank
- Electrical components and cabling according to international standarts and security regulations.
- Completely sealed to guarantee IPX5 water protection
  Thermostat-controlled rinse and washing temparature for efficient washing
- Non-return - Check valve System
- Washing temperature at 55-60°C (water supply at a minimum of 2 bar and 50°C)
- Rinsing temperature at 80-85°C (water supply at a minimum of 2 bar and 50°C)



STANDART EQUIPMENT

- Stainless Steel Washing Arms
- Rinsing Pump
- 5 Baskets Promotional (3x Plate, 1x Glass and 1x Cutlery)
- Electrical Connection Cable,
- Flexible Water Supply and Drain Hose Free Spare Part Kit

OPTIONAL EQUIPMENT

- Drain Pump
- Detergent Dispenser
- Rinse Aid Dispenser

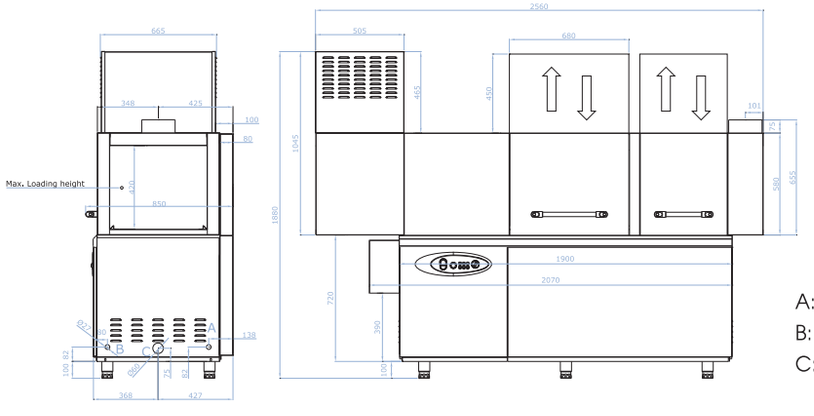

A: Waterinlet
B: Electric connection
C: Drain







Technical Features

Electricty connection	400V~3NPE / 50Hz	Reductor power	0.25 kW
Total load	48 kW	Drying fan power	0.55 kW
Washing capacity (Plate/hr)	2130 (max.)	Heat power (Wash/Rins/Dry)	9 kW- 27 kW-8 kW
Washing capacity (Basket/hr)	133	Dirty water discharge connection	11/4 “(42 mm)
Pre-wash tank capacity	60 lt	Max.noise	85 dBA
Main washing tank capacity	90 lt (max).	Gross weight	320 kg
Boiler tank capacity	17 lt	Dimensions(LxWxD)	800x2560x1880 mm
Washing water temp.	55-60 °C	Max.slope	6°
Rinsing water temp.	80-85 °C	Production class	IPX5
Water inlet connection	3/4 “	Rack dimension	50 x 50 cm
Pump power(pre-washing/main washing/rinsing)	0.72 kW/1.5 kW/0.37kW	Loading height	42 cm
Water inlet pressure / Temp.	2-4 Bar / 50 °C		

OKY

UTENSIL WASHER



OKY
UTENSIL WASHER

FEATURES

- Stainless Steel Body
- Hygenic washing tank
- 4.5 l water consumption per cycle
- Easy to use electronic control panel
- 3 Selectable Washing Programmes
- Saves energy, detergent and water
- Stainless steel washing arms
- Adjustable feet for height optimization
- Easy start up: one button to fill in and heat water in the boiler tank
- Electrical components and cabling according to international standarts and security regulations.
- The potwasher is completely sealed to guarantee IPX5 water protection
- Thermostat-controlled rinse and washing temparature for efficient washing
- Non-return - Check valve System
- Washing temperature at 55-60°C (water supply at a minimum of 2 bar and 50°C)
- Rinsing temperature at 80-85°C (water supply at a minimum of 2 bar and 50°C)



STANDART EQUIPMENT

- Stainless Steel Washing Arms
- Rinsing Pump
- Drain Pump
- Detergent Dispenser
- Rinse Aid Dispenser
- 2 Baskets Promotional (Main and inner frame)
- Electrical Connection Cable, Flexible Water Supply and Drain Hose
- Free Spare Part Kit

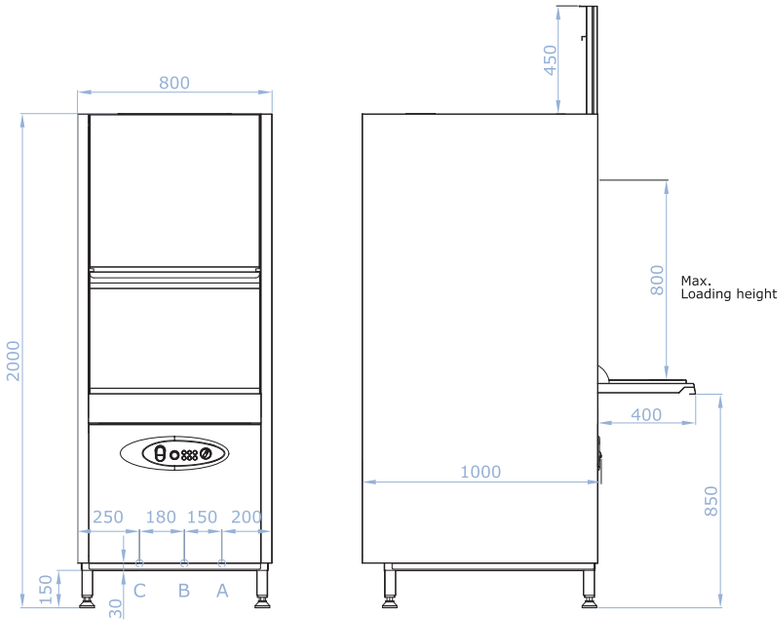

A: Electric connection
B: Waterinlet
C: Drain







Technical Features

Electricty connection	400V~3NPE / 50Hz	Heat power (Wash/Rins/Dry)	4.5 kW- 14 kW
Total load	16.7 kW	Dirty water discharge connection	1 1/4" (42 mm)
Washing capacity (Plate/hr)	1650 (max.)	Max.noise	85 dBA
Washing capacity (Basket/hr)	30 / 10 / 7.5	Gross weight	220 kg
Main washing tank capacity	65 lt (max).	Dimensions(LxWxD)	780 x 950 x2040 mm
Boiler tank capacity	18 lt	Max.slope	6°
Washing water temp.	55-60 °C	Production class	IPX5
Rinsing water temp.	80-85 °C	Drain pump	0.26 kW
Water inlet connection	3/4 "	Washin program	3
Pump power(main washing/rinsing)	2.8 kW/0.37kW	Loading height	80 cm
Water inlet pressure / Temp.	2-4 Bar / 50 °C		

ACCESSORIES



base rack with compartment

8740.OBB09.00	with 9 compartment	50 x 50 x 10
8740.OBB16.00	with 16 compartment	50 x 50 x 10
8740.OBB25.00	with 25 compartment	50 x 50 x 10
8740.OBB36.00	with 36 compartment	50 x 50 x 10
8740.OBB49.00	with 49 compartment	50 x 50 x 10

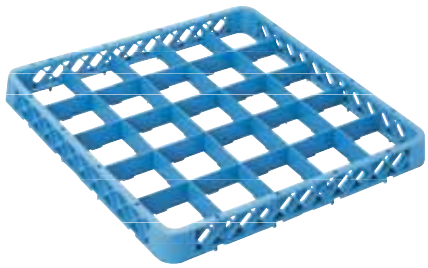

rack extender with compartment

8740.OBY09.00	with 9 compartment	50 x 50 x 4.5
8740.OBY16.00	with 16 compartment	50 x 50 x 4.5
8740.OBY25.00	with 25 compartment	50 x 50 x 4.5
8740.OBY36.00	with 36 compartment	50 x 50 x 4.5
8740.OBY49.00	with 49 compartment	50 x 50 x 4.5



rack base for plate and tray

8740.OTB50.00	50 x 50 x 10



rack base for cutlery

8740.CKB50.00	50 x 50 x 10



glass rack

8740.DBB50.00	50 x 50 x 10



glass rack (for Glasswasher OBY 500 B)

8740.BMS35.00	35 x 35 x 15

ACCESSORIES



Rinsing Pump 6262.00012.01



Drain Pump 6262.00016.00



Detergent Dispenser 6262.30666.02
Rinse Aid Dispenser 6262.30666.01

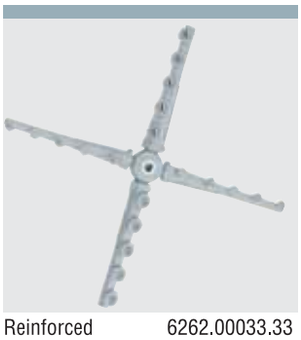

Reinforced Polypropylene washing arms 6262.00033.33



Stainless Steel Washing Arms 6262.00030.06



Basket Trolley 7959.60578.40



Pre-Wash Hose on table and wall 9760.40005.23



Conveyor Benches 0711.00000.01



Corner Conveyor Benches 0711.00000.00



Inlet Table



Outlet Table

Left	Right	L	W	H
7711.07075.22	7711.07075.21	700	750	870
7711.09075.22	7711.09075.21	900	750	870
7711.12075.22	7711.12075.21	1200	750	870
7711.14075.22	7711.14075.21	1400	750	870
7711.16075.22	7711.16075.21	1600	750	870
7711.19075.22	7711.19075.21	1900	750	870

Left	Right	L	W	H
7711.07075.12	7711.07075.13	700	750	870
7711.09075.12	7711.09075.13	900	750	870
7711.12075.12	7711.12075.13	1200	750	870
7711.14075.12	7711.14075.13	1400	750	870
7711.16075.12	7711.16075.13	1600	750	870
7711.19075.12	7711.19075.13	1900	750	870



www.oztiryakiler.com.tr **Export e-mail: export@oztiryakiler.com.tr** **e-mail: oztiryakiler@oztiryakiler.com.tr**

Factory / **Headquarters:** Cumhuriyet Mah. Eski Hadımköy Yolu Cad. No: 8 P.K 34500 Büyükçekmece / İstanbul - Türkiye
Tel: +90 (212) 886 78 00 (pbx) - 886 88 00 - 886 78 10/11 **Fax:** +90 (212) 886 78 09 - 886 62 36