Electrolux

Warewashing
Short Small Glasswasher with Cold Rinse and Water Softener - 3 cycles

ITEM #

MODEL #

NAME #

SIS #

AIA #



Warewashing

Short Small Glasswasher with Cold Rinse and Water Softener - 3 cycles

402126 (EGWSSICW)	Glasswasher (shortsmall), double skin, with water softener, cold rinse, 3 cycles, 30b/h

Short Form Specification

Item No.

Unit should be Glasswasher type for rack dimension of 400*400mm. 304 AISI stainless steel front panel, wash tank, tank filter, wash and rinse arms. Double skin door and cabinet. Upper and lower rotary washing arms and rinsing arms. Separate washing and rinsing circuits. Built-in 5 litre boiler, washing temperature 55/65°C and hot rinse temperature 80/90°C. Three washing cycles: 120/300/120 seconds. Rinse aid dispenser. Functions: cold rinse after the hot rinse cycle. Water softener. Hourly capacity: 30 baskets. Supplied with: n. 1 basket for glasses (400x400mm) with cutlery insert.

APPROVAL:

Main Features

- Built-in pressure boiler sized to raise incoming water to guarantee a minimum rinsing temperature of 82 °C for sanitizing rinse. No external booster is required.
- Washing system endowed with rotating washing arms from both top and bottom, high powered wash pump and large capacity wash tank guarantee professional washing.
- Maximum capacity of 30 racks per hour.
- New electronic control panel for easy setup of the working parameters and self diagnosis.
- Easy service access to main components without moving the unit.
- Low noise level.
- Rinse booster pump available to be installed on site.
- Extra program to cold rinse beer and wine glasses providing sanitized glasses, cool enough to handle.
- Equipped with water softener to ensure optimal rinsing results.
- Solid double skinned counter-balance door with hurt-free handle fully in stainless steel.
- Incorporated Soft Start feature to offer additional protection to more delicate items.
- 120/300/120 seconds cycle, the third cycle includes cold rinse.

Construction

- Large tank filter collects the soil to keep the wash water clean for a longer time and have better washing performance.
- Unit to feature smooth surfaces to facilitate cleaning.
- Completely closed on the back by a cover plate.
- Internal elements (arms and filter) easily extractable.
- Wash/rinse arms and nozzles in stainless steel.
- Finished in top quality materials to ensure durability.
- Unit to feature rinse aid dispenser pump.
- 304 AISI stainless steel front panel, load bearing frame, wash tank, tank filter, wash and rinse arms.
- Double skin door construction preserves heat inside the tank to lower energy consumption and the noise. Counter-balance mechanism minimizes impact when opening and closing.
- Deep drawn pressed wash tank with fully rounded corners, sloped towards the drain to prevent dirt buildup, provides fast drainage in just a few minutes. With no welding points the pressed tank offers a guaranteed water tight solution.

Included Accessories

• 1 of Stainless steel tank filter	PNC 864003
• 1 of Yellow cutlery container	PNC 864242
• 1 of Square basket for glasses 400x400x150mm	PNC 864470

Electrolux
Short Small Glasswasher with Cold Rinse and Water Softener - 3 cycles
Warewashing

Optional Accessories

• Kit to measure total and partial water hardness	PNC 864050 ❑
• Rinse booster pump kit for single tank pressure dishwasher	PNC 864051 ❑
• Yellow cutlery container	PNC 864242 ❑
• Filter for total demineralization	PNC 864367 ❑
• Pressure reducer for single tank dishwasher	PNC 864461 ❑
• Drain pump kit for glasswasher electronic	PNC 864465 ❑
• Kit detergent dispenser	PNC 864469 ❑
• Kit 4 plastic boxes for cutlery - yellow	PNC 865574 ❑
• Cover rack for small and light items (500x500 baskets)	PNC 867016 ❑
• Basket for glasses (395x395x115)	PNC 867033 ❑
• Insert for 12 saucers, 290X90x75mm	PNC 867048 ❑
• Basket for glasses (h 100 mm)	PNC 867053 ❑
• Basket for glasses (h 200 mm)	PNC 867054 ❑
• Basket for glasses and saucers/cutlery inserts	PNC 867055 ❑
• Basket for glasses with angled base	PNC 867056 ❑
• Round basket kit with square frame	PNC 867057 ❑
• Insert for "flute" glasses	PNC 867058 ❑
• Insert for 14 saucers	PNC 867060 ❑
• Inclined insert for cups	PNC 867061 ❑

The company reserves the right to make modifications to the products without prior notice. All information correct at time of printing.

Warewashing
Short Small Glasswasher with Cold Rinse and Water Softener - 3 cycles

Front

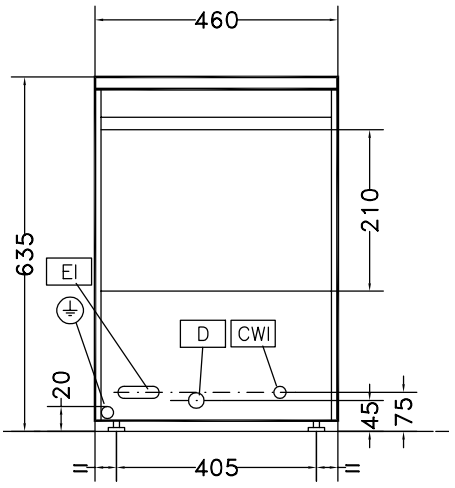

Top

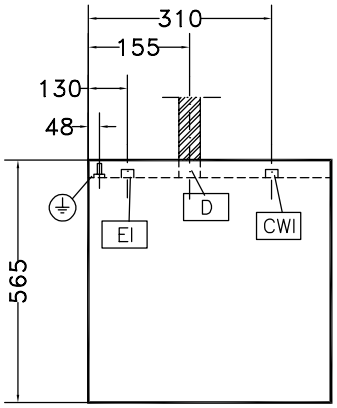

CWI1 = Cold Water inlet 1
D = Drain
EI = Electrical connection
EO = Electrical Outlet
V = Air vents
WI = Water inlet
XD = Detergent connection
XR = Rinse aid connection

Side

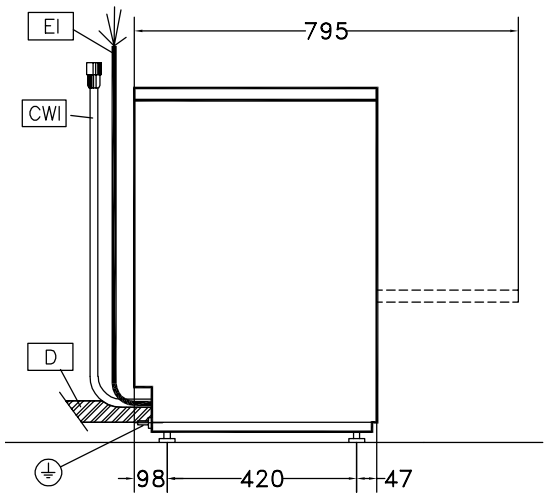

Electric

Supply voltage:	
402126 (EGWSSICW)	220-240 V/1N ph/50 Hz
Total Watts:	3.3 kW
Boiler heating elements:	3 kW
Tank heating elements:	0.8 kW
Wash pump size:	0.3 kW

Water:

Pressure, bar min/max:	1.8-3 bar
Water supply temperature:**	10-55 °C
Working cycles time (sec.):	120/300/120
Boiler Capacity (lt):	5
Incoming water line size:	G 3/4"
Washing cycle temperature:	55-65 °C
Washing tank capacity (lt):	6
Cold rinse cycle duration:	10 sec.
Cold rinse cycle temperature:	10 °C
Cold rinse cycle water consumption:	1.8 lt/cycle
Hot rinse cycle duration (sec.):	16
Hot rinse cycle temperature:	80-90 °C
Hot rinse cycle water consumption (lt):	2.3

Key Information:

External dimensions, Height:	635 mm
External dimensions, Width:	460 mm
External dimensions, Depth:	565 mm
Net weight:	34 kg
Shipping weight:	40 kg
Shipping height:	780 mm
Shipping width:	640 mm
Shipping depth:	520 mm
Shipping volume:	0.26 m³
Noise level:	69 dBA

The claimed noise level is measured according to EN 60335-2-58 (Annex ZAA) / ISO 11204.

N° of working cycles - sec.:	3 (120/300/120)
Basket capacity:	30/h

The claimed capacity is measured when the unit is connected to hot inlet water of 55°C; if the inlet water is cold, the cycle time could be longer.

Cell dimensions - width:	400 mm
Cell dimensions - depth:	400 mm
Cell dimensions - height:	210 mm

The company reserves the right to make modifications to the products without prior notice. All information correct at time of printing.

2016.11.28