Electrolux

Warewashing Undercounter Dishwasher with Pressure Boiler

ITEM #

MODEL #

NAME #

SIS #

AIA #



Warewashing

Undercounter Dishwasher with Pressure Boiler

400140 (NUC1)	Undercounter Dishwasher with pressure boiler - 230 V/1N/50 Hz

Short Form Specification

Item No.

Unit shall be Electrolux undercounter type hot water rinsing dishmachine with pressure boiler. Electrical characteristics to be __230 volts one phase operation with two wash cycles of 120/180 seconds for normally or heavily soiled items. Rinse temperature and pressure guaranteed by built in pressure boiler. Washing performance is guaranteed by a powerful wash pump, revolving washing spray arms. 304 Stainless steel construction to include door, frame, wash tank. The unit shall include rinse aid dispenser pump.

Main Features

- Built-in pressure boiler sized to raise incoming 50 °C water to guarantee a minimum rinsing temperature of 82 °C for sanitizing rinse. No external booster is required.
- Incorporated Soft Start feature to offer additional protection to more delicate items.
- Washing system endowed with rotating washing arms, high powered wash pump and large capacity boiler for professional washing.
- 4 second (variable) pause after washing and before rinsing ensures that no drops of unclean water will fall on the clean items at the end of the rinsing cycle.
- Fully automatic self-cleaning cycle avoids the risk of bacteria proliferation.
- 120/180 seconds cycle.
- Simple control panel with digital display allows on-site personalization of washing and rinsing cycle times and temperatures as well as precise rinse aid and detergent quantities to suit customer's needs.
- Easy to remove wash/rinse arms.
- Simple service from the front.
- IPX 4 water protection.
- Pre-arranged to accept external dispensers.
- Pre-arrangement for HACCP system implementation and Energy Management device.

Construction

- Unit to feature smooth surfaces to facilitate cleaning.
- Front and side panels, door and wash tank made in heavy duty anti-corrosive AISI 304 stainless steel.
- 304 stainless steel boiler with higher welding protection to increase resistance to corrosion.
- PVC water supply hose with metal connections resistant to high water pressure.
- Completely closed on the back by a cover plate.
- Single phase electrical connection.

Included Accessories

• 1 of Yellow cutlery container	PNC 864242
• 1 of Basket for 18 dinner plates - yellow	PNC 867002

Optional Accessories

• 12lt external manual water softener	PNC 860412 ❑
• 8lt external automatic water softener	PNC 860413 ❑
• Stand for undercounter dishwasher	PNC 860418 ❑
• 20lt external manual water softener	PNC 860430 ❑
• Integrated HACCP kit	PNC 864001 ❑
• HACCP printer kit	PNC 864002 ❑

APPROVAL:

Electrolux
Warewashing
Undercounter Dishwasher with Pressure Boiler

• External detergent level probe kit	PNC 864004 ❑
• External rinse aid level probe kit	PNC 864005 ❑
• Drain pump kit for 50Hz dishwashers	PNC 864012 ❑
• Stainless steel inlet hose kit	PNC 864016 ❑
• Filter for partial demineralization	PNC 864017 ❑
• Kit to measure total and partial water hardness	PNC 864050 ❑
• Rinse booster pump kit for single tank pressure dishwasher	PNC 864051 ❑
• Detergent dosing kit	PNC 864218 ❑
• Stainless steel tank filter for single skin undercounter	PNC 864222 ❑
• Yellow cutlery container	PNC 864242 ❑
• AISI 304 stainless steel back panel for undercounters EUC	PNC 864246 ❑
• Pressure reducer for single tank dishwasher	PNC 864461 ❑
• Half size basket universal	PNC 864527 ❑
• Half size basket for plates	PNC 864528 ❑
• Half size basket for glasses	PNC 864529 ❑
• Kit 4 plastic boxes for cutlery - yellow	PNC 865574 ❑
• Basket for 18 dinner plates - yellow	PNC 867002 ❑
• Basket for 48 small cups or 24 cups - blue	PNC 867007 ❑
• Cover rack for small and light items (500x500 baskets)	PNC 867016 ❑
• Basket for 16 vertical glasses (h 70 mm - diam 100 mm) - blue	PNC 867023 ❑

The company reserves the right to make modifications to the products without prior notice. All information correct at time of printing.

Electrolux

Warewashing
Undercounter Dishwasher with Pressure Boiler

Front

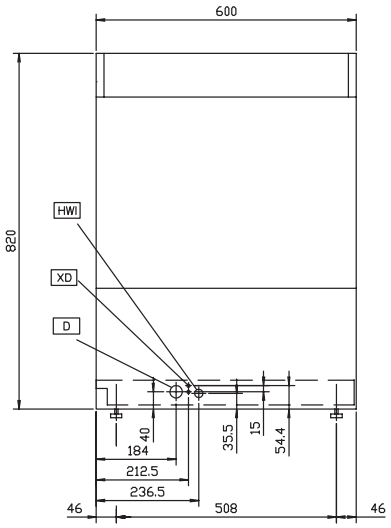

Top

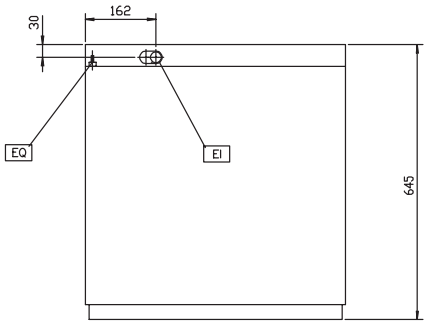

D = Drain
EI = Electrical connection
EO = Electrical Outlet
HWI = Hot water inlet
V = Air vents
WI = Water inlet

XD = Detergent connection
XR = Rinse aid connection

Side

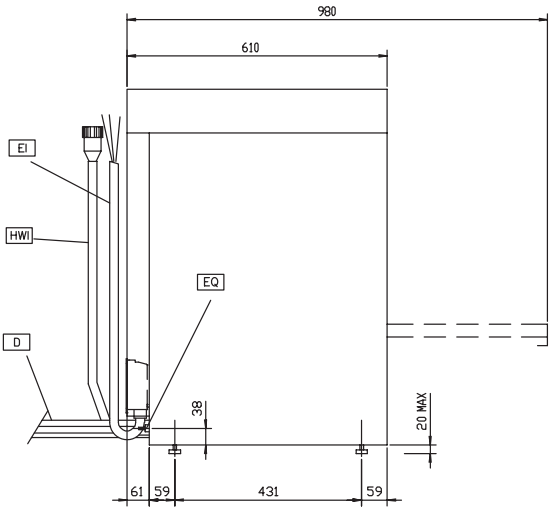

Electric

Supply voltage:	
400140 (NUC1)	230 V/1N ph/50 Hz
Total Watts:	3.65 kW
Boiler heating elements:	2.8 kW
Tank heating elements:	2 kW
Wash pump size:	0.736 kW

Water:

Pressure, bar min/max:	2-3 bar
Water supply temperature:	50 °C
Inlet Water supply pressure:	29 - 44 psi (2 - 3 bar)
Water consumption per cycle (lt):	3.3
Working cycles time (sec.):	120/180
Boiler Capacity (lt):	5.8
Tank Capacity (lt):	33
Drain line size:	40 mm
Washing cycle temperature:	55-65 °C
Washing tank capacity (lt):	33
Hot rinse cycle duration (sec.):	16
Hot rinse cycle temperature:	80-90 °C
Hot rinse cycle water consumption (lt):	3.3

Key Information:

Baskets per hour:	30
Dishes per hour:	540
Wash temperature (MIN):	55-65°C
Rinse temperature (MIN):	80-90 °C
External dimensions, Height:	820 mm
External dimensions, Width:	600 mm
External dimensions, Depth:	610 mm
Packaging size (WxDxH):	600x610x820 mm
Noise level:	<70 dBA
N° of working cycles - sec.:	2 (120/180)
Cell dimensions - width:	500 mm
Cell dimensions - depth:	500 mm
Cell dimensions - height:	330 mm

The company reserves the right to make modifications to the products without prior notice. All information correct at time of printing.

2016.10.19