G4 SERAPHIM SINGLE CUP COFFEE BREWER

MODEL: SERA2B, SERA2W



SERA2W
White Single Cup Coffee Brewer
with Twin Brew Heads

Brew Batch Re-Imagined™

It is often said that good things come in small packages, and the Seraphim™ is no exception. It's no surprise that traditional coffee brewers lack the aesthetic appeal that their counterparts so boldly flaunt on the front counter of every café. Well, we see the Seraphim as the first step of many in the right direction.

Built on the chassis of the 2012 SCAA Best New Product™, People's Choice Award Winner, the Curtis Gold Cup brewer, and the industry standard Curtis Water Tower, the Seraphim takes single cup brewing to the next level. The Seraphim is not only one of the most powerful and most technologically advanced brewers ever built, it is now one of the best looking as well.

The Seraphim allows you to brew amazing coffee time after time without worry of inconsistencies. With all the bulky, yet necessary, componentry hidden out of sight under the counter, the goal of our design is to make your coffee the focal point. We don't want to reinvent the way that coffee is brewed, but we do want to re-imagine it. This is Batch Brew Re-Imagined™!

BREWER FEATURES

- **Undercounter Brewing System** — Water heating unit is installed below the counter to remove barriers between you and your customers
- **Standard Seraphim Package** — Includes two seraphs (brew heads), one under- counter water heating unit, one G4 touchscreen controller, and one drip tray
- **Brewing Methods** — Chemex, Kalita, V60, Bee Dripper, Able Kone Brewing System, French press, etc.
- **Temperature Stability and Flow Rate** — Reliable, highly stable temperature and flow rate. Just set it and forget it
- **No Cavitation** — Stable environment eliminates low pressure pockets
- **Color Options** — Flat black and pearl white
- **Installation** — Drilling into the countertop is required



SERA2B
SERA2W

SINGLE CUP
COFFEE BREWER

Basic Installation

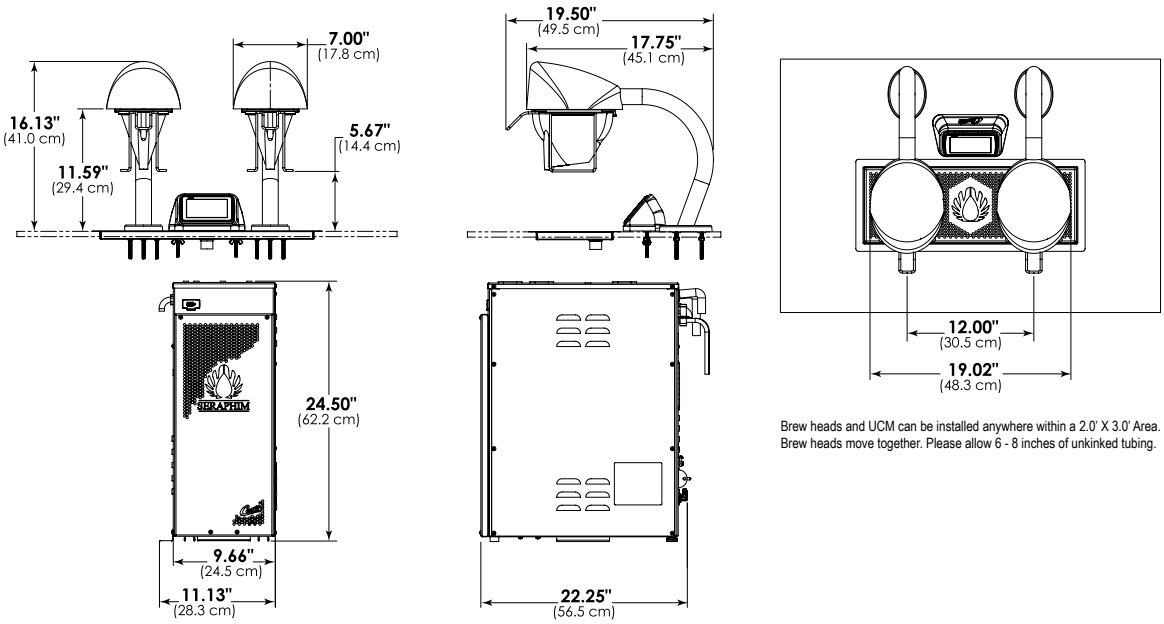

Brew heads and UCM can be installed anywhere within a 2.0' X 3.0' Area.
Brew heads move together. Please allow 6 - 8 inches of unkinked tubing.

Electrical Supply Requirements

MODEL #	PHASE	VOLTS	AMPS	HEATING CONFIG	WIRE	WATTS	HERTZ	GAL/HR
SERA2B/SERA2W	1 PH	110/220V	12.5/22.7A	2X2500W	2/3W+G	1500/5000W	50/60 Hz	4.3/10.0

Dimensions

MODEL #	DIMENSIONS	CUP CLEARANCE
SERA2B/SERA2W	Above Counter: 16.00"H x 19.00"W x 19.00"D	5.50" w/Brew Basket
	Water Heating Unit: 24.50"H x 11.13"W x 22.25"D	11.50" w/out Brew Basket

Water Supply Requirements

WATER CONNECT	WATER PRESSURE	MIN. FLOW RATE	WATER TANK VOL.
1/4" Flare	20 - 90 psi	2.0 GPM	5.0 Gal.

SPECIFICATIONS SUBJECT TO CHANGE WITHOUT NOTICE

WILBUR CURTIS CO., INC.
6913 Acco Street, Montebello, CA 90640-5403
Telephone: 800-421-6150 · 323-837-2300
Fax: 323-837-2406
www.wilburcurtis.com

NOV/2015 – F-4006 revB