GEMINI COFFEE BREWING SYSTEM

Model: GEM–120A–10 (120V with Standard Brew Basket)
GEM–120A–12 (120V with High Capacity Deluxe Brew Basket)
GEM–120A–30 (220V with Standard Brew Basket)



GEM-120A-10 with Standard Brew Basket

ITEM NO

PROJECT

DATE

The Gemini System 120A conveniently and automatically brews 12 or 24 cups of rich, full- bodied coffee per cycle into a 36-cup insulated Satellite Server. A brew-ready light signals when water temperature is ready for the next brewing cycle. This full-featured brewer conveniently plugs into a conventional 115V wall outlet.

FEATURES AT A GLANCE

- Brews automatically in 12-cup or 24-cup increments.
- Hot water faucet lets you draw steaming hot water for tea, soups or cup meals even during brewing.
- High-efficiency, double-wall insulation in each Satellite Server maintains coffee temperature for extended periods without warming. Coffee cannot deteriorate, but maintains its rich, full-bodied flavor.
- Locking Satellite lids guard against accidental spills.
- Color coded satellite faucets available for regular and decaffeinated coffee and tea.

OPTIONS

- 2.5„ adjustable plastic legs.
- Oversize Stainless Steel Brew Basket.

GEM-120A-10
GEM-120A-12*
GEM-120A-30

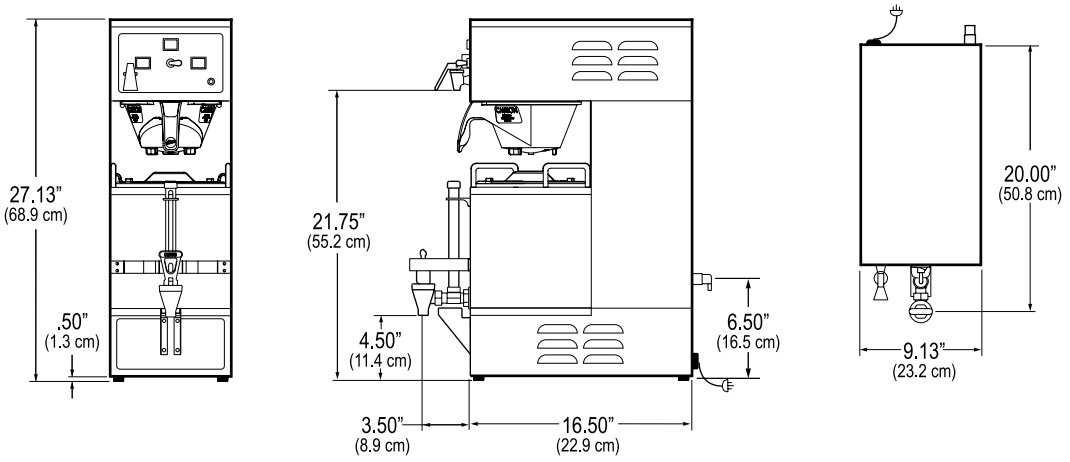

SPECIFICATIONS

MODEL	DIMENSIONS (H x W x D)	VOLTAGE	AMPS	WATTS	WIRE	HERTZ	WATER CONNECTION	SHIP WEIGHT (LBS.)	CUBE (CU. FT.)
GEM-120A-10	27.13" x 9.13" x 20.25"	120V	15A	1775W	2 W+G	50/60 Hz	1/4" Flare	41	7.66
GEM-120A-12*	27.13" x 9.13" x 20.25"	120V	15A	1775W	2 W+G	50/60 Hz	1/4" Flare	41	7.66
GEM-120A-30	27.13" x 9.13" x 20.25"	220V	9.9A	2175W	2 W+G	50/60 Hz	1/4" Flare	41	7.66

** GEM-120A-12 USES HIGH CAPACITY DELUXE BREW BASKET (WC-3338-101)*

GEMINI ACCESSORIES



GEM-3 INSULATED SATELLITE SERVERS

Expand your coffee service by placing extra Satellite Servers in strategic locations away from brewer. Serving stands are available in two heights to provide extra convenience.

Dimensions (HxWxD).....11" x 9" x 9"



GEM-5 HEATED SATELLITE SERVING STAND

Raises Satellite to 9.75" for decanter service.

Dimensions (HxWxD).....9.75" x 9" x 9"
Power.....115V/100W



GEM-8 HEATED SATELLITE SERVING STAND

Raises Satellite to 5.38" for cup service.

Dimensions (HxWxD).....5.38" x 9" x 9"
Power.....115V/100W



STAINLESS STEEL DRIP TRAYS

Perfect for Gemini Systems and Stands

Dimensions (HxWxD).....0.75" x 8" x 5"



WC-3504 LEGS

2.5" to 3" adjustable black plastic legs

SPECIFICATIONS SUBJECT TO CHANGE WITHOUT NOTICE.

WILBUR CURTIS COMPANY, INC.
6913 Acco Street, Montebello, CA 90640-5403
Telephone: 800-421-6150 · 323-837-2300
Technical Support: 800-995-0417 M-F 5:30am-4:00pm PST
Fax: 323-837-2406
www.wilburcurtis.com

JUNE/2013 – F-1815 rev.C