G4 ThermoPro® One Gallon Coffee Brewers



G4TP1S63A3100
Single Coffee Brewer
with 1.0 Gallon TFT1G without base
(sold separately)



G4TP1T10A3100
Twin Coffee Brewer
with 1.0 Gallon TFT1G without base
(sold separately)

Brewer Features

Generation Four (G4) Digital Control Module
Large, 4.3" Touch Screen

Icon-Driven Interface
Real Time Feedback

Built-in Self Diagnostic System
Energy Saving Mode



TXSG0101S600
1.0 Gallon
with Sight Glass



TFTR1G
1.0 Gallon
with Rear-Facing Display



TFT1G
1.0 Gallon
with Lockable Base



TFT1G2
1.0 Gallon
without Base



TFT1G3
1.0 Gallon
Non-Lockable Base

Curtis®
Perfecting the art of brewing since 1941

G4 ThermoPro® One Gallon Coffee Brewers

G4TP1S63A3100
G4 Single One Gallon Coffee Brewer

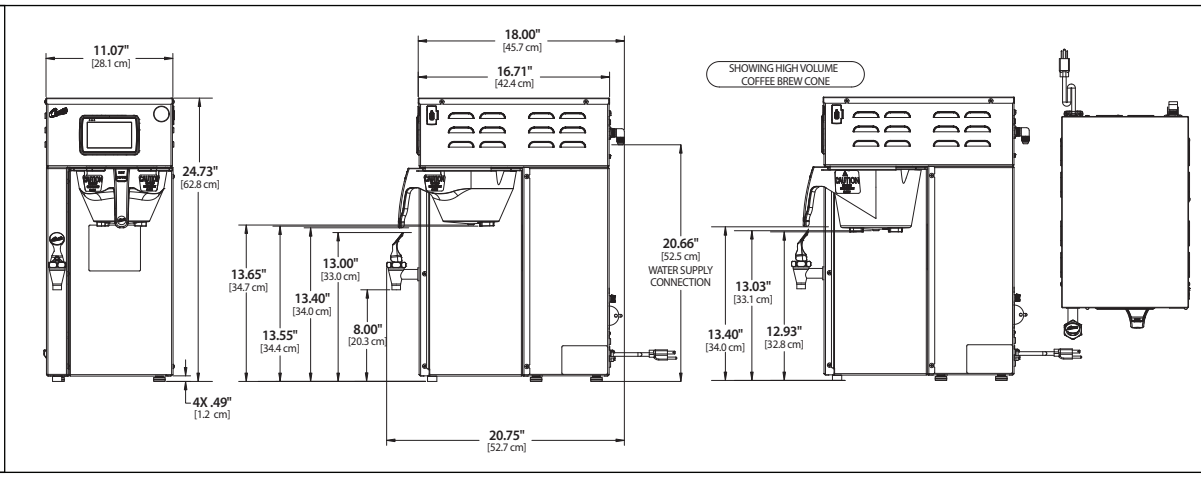

G4TP1T10A3100
G4 Twin One Gallon Coffee Brewer

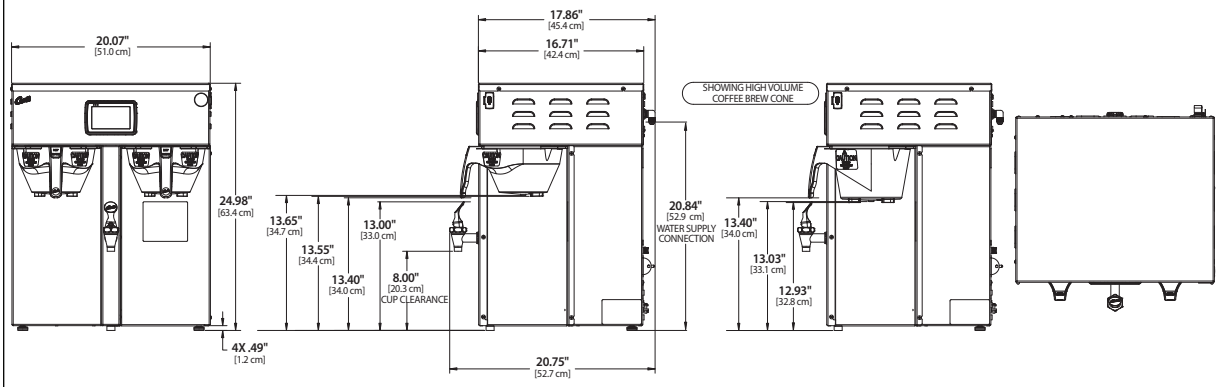

Specifications

MODEL #	DESCRIPTION	HEIGHT x WIDTH x DEPTH	BREWER FILL WEIGHT	BREWED GAL/HR
G4TP1S63A3100	G4 ThermoPro® Single 1.0 gal.	24.73" x 11.07" x 20.75"	59.4 lbs.	4.5/10.0
G4TP1T10A3100	G4 ThermoPro® Twin 1.0 gal.	24.98" x 20.07" x 20.75"	118.4 lbs.	15.0/21.0

Utility Requirements

	ELECTRICAL								WATER			
MODEL #	PHASE	VOLTS	AMPS	MIN. CIRCUIT	HEAT CONFIG	WIRE	WATTS	HERTZ	CONNECTOR	PRESSURE	MIN. FLOW RATE	TANK VOL.
G4TP1S63A3100	1 PH	110/220V	13.8/12.2A	15/20A	2 x 1600W	2/3W+G	1650/2700W	50/60 Hz	3/8" Flare	20 - 90 psi	1.0 GPM	2.2 gal.
G4TP1T10A3100	1 PH	220V	23.0/34.5A	30/50A	3 x 2500W	3W+G	5100/7600W	50/60 Hz	3/8" Flare	20 - 90 psi	2.0 GPM	5.2 gal.

SPECIFICATIONS SUBJECT TO CHANGE WITHOUT NOTICE

Dispenser Reference Guide

MODEL #	TXSG0101S600	TFT1G/TFTR1G	TFT1G2	TFT1G3
G4TP1S63A3100	✓	✓	✓	✓
G4TP1T10A3100	✓	✓	✓	✓

Wilbur Curtis Co., Inc. / 6913 Acco Street / Montebello CA 90640
800.421.6150 / 323.837.2300 / www.wilburcurtis.com

Perfecting the art of brewing since 1941

SEP/2017 – F-5024 revNC