AIRPOT DIGITAL COFFEE BREWING SYSTEMS

MODEL: D500GT10A000, D500GT63A000, D500GTH12A000



ITEM NO

PROJECT

DATE

FEATURES AT A GLANCE

- **Precise "gourmet" control over all critical functions** — The G3 Digital Control Module provides you the expertise to brew premium gourmet coffee with ease.
- **Built-In Fine Tuning Brewing Modes** — Pre-infusion or pulse brew enhances extraction of gourmet coffee flavor. Cold water brew lock-out prevents brewing when water temperature is below set level.
- **Curtis' Exclusive G3 3-Year Warranty** — Provides 3 full years of protection on the digital control components.
- **Out-of-the-Box Operation** — Pre-programmed factory settings deliver ideal results.
- **Reliability You Can Depend On.** The Digital Control Module is encapsulated in high-tech polymer and is impervious to heat, steam and moisture.
- **Intuitive Scroll-Through Precision Programming** — Large, brightly lighted display communicates functions at a glance. Easily adjust time, volume, temperature, brew functions and more.
- **Tamper Resistant** — Changeable access code prevents unauthorized adjustment.
- **Easy-to-Use** — Simple graphic design with color-coded buttons for all operating functions.
- **Saves Operating Costs** — Energy save mode automatically reduces energy consumption when brewer is idle.
- **Reduce Downtime** — G3 on-board self-diagnostics continually sense proper brewing operation. A service phone number and error code will be displayed in the rare event technical assistance is required.
- **Programmable Display Banner** — Can be set to display your operation's name and message.
- **Quick and Simple Installation** — Standard 120VAC Operation.
- **ThermoPro™ Airpots Keep Coffee Quality at its Peak of Freshness** — High heat retention design maintains temperature without additional warming.

G3 GENERATION THREE

The Curtis G3 Airpot System PLUS your gourmet roast provides luxurious flavor with brewing simplicity. . . every time.

With the Curtis G3 Coffee Brewing System there's no need for complex brewing adjustments, unless you want them. With simple "scroll-through" programming on an oversized LCD display you can effortlessly offer customers gourmet taste, without any fuss. Easily set the brewer to your exacting standards, or use the Curtis' factory settings to deliver ideal results.

When you add it up, the Curtis G3 Systems offer a host of features that optimize coffee quality and flavor, while reducing maintenance and service. G3 features include...digital temperature and brew-by-volume control, pre-infusion and pulse brew technology, PM alerts, cold water brew lock-out, quality timers, and much more. From traditional to gourmet roasts, this equals a great cup of coffee, and increased profits. That's the bottom line.

SPECIFICATIONS

Model No: D500GT10A000
Dimensions: 24.48" x 9.25" x 16.69"
H x W x D
Voltage*: 120V, 50/60Hz
2 Wire + Ground
Power Rqmts.: 1675W/14A
Water Source: 1/4" Flare
Airpot Clearance: 14.91"
Ship Weight: 36 lbs.
Cube (cu. ft.): 4.1

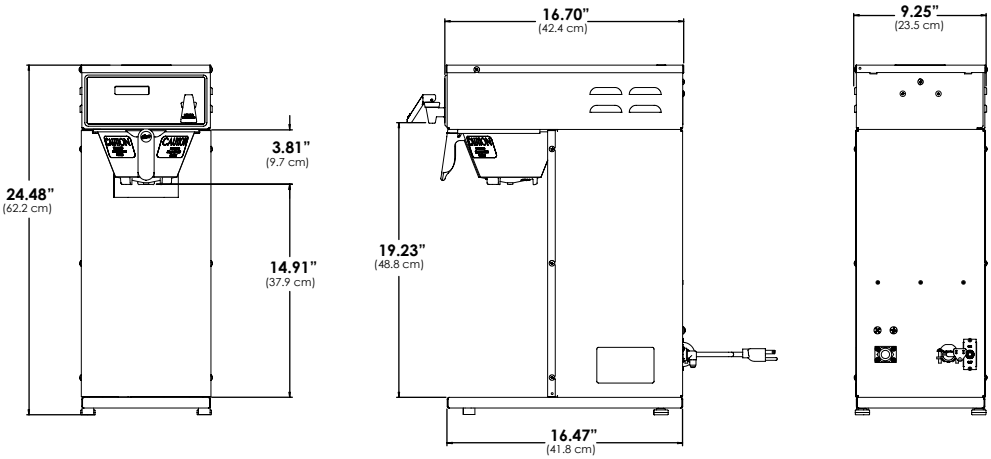

SPECIFICATIONS

Model No: D500GT63A000 (Dual Voltage)
Dimensions: 24.48" x 9.25" x 16.69"
H x W x D
Voltage*: 120V/220V, 50/60Hz
2/3 Wire + Ground
Power Rqmts.: 1556/2630W, 13A/12A
Water Source: 1/4" Flare
Airpot Clearance: 14.91"
Ship Weight: 36 lbs.
Cube (cu. ft.): 4.1

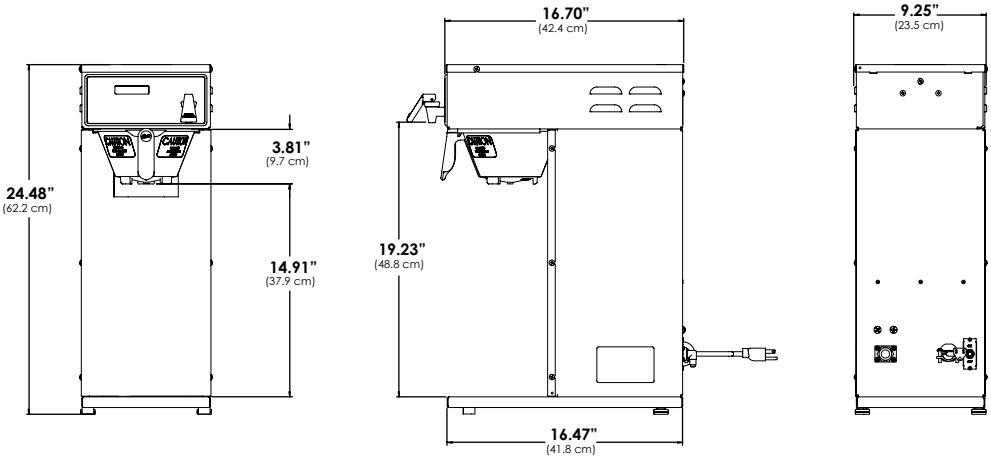

SPECIFICATIONS

Model No: D500GTH12A000 (Tall Model)
Dimensions: 27.73" x 9.25" x 16.70"
H x W x D
Voltage*: 120V, 50/60Hz
2 Wire + Ground
Power Rqmts.: 1675W/14A
Water Source: 1/4" Flare
Airpot Clearance: 18.09"
Ship Weight: 35 lbs.
Cube (cu. ft.): 4.6

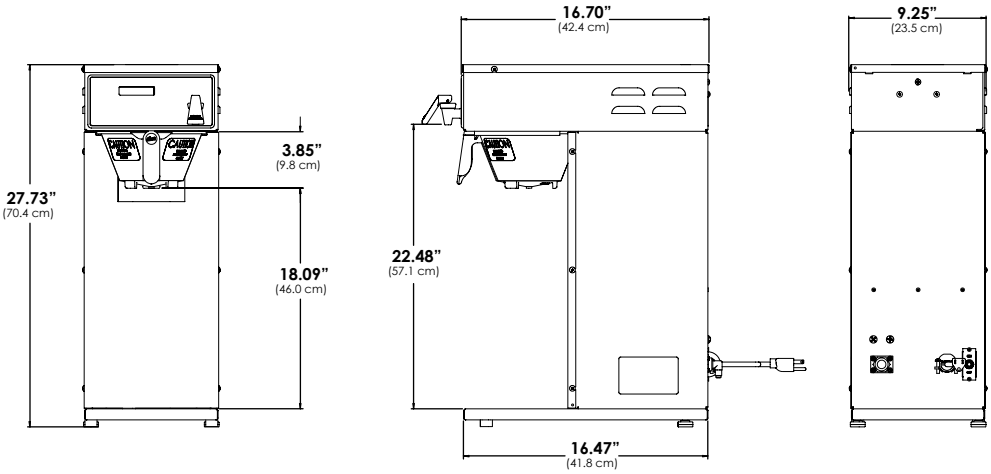



ThermoPro™ TLXA 2.2L Airpots.
(Sold separately)

WILBUR CURTIS COMPANY, INC.
6913 Acco Street, Montebello, CA 90640-5403
Telephone: 800-421-6150 · 323-837-2300
Fax: 323-837-2406
www.wilburcurtis.com



© 2008 Wilbur Curtis Company, Inc.

Printed In U.S.A · Jan/2012 – 12477 F-3330 rev.C