www.santos.fr

CITRUS JUICER #52

For all citrus fruits: limes, lemons, oranges, grapefruits.
Hight output model



Internationally patented models

handmade IN FRANCE

CE KC c UL us LISTED NSF RoHS COMPLIANT 2002/95/EC

POWERFUL, EFFICIENT, DURABLE

The citrus juicer #52 is the perfect appliance to squeeze any kind of citrus thanks to the 3 removable squeezers (cones) delivered with the juicer.
This commercial juicer is equipped with powerful and reliable commercial motor.
For use everywhere you need a fresh squeezed citrus juice: juice bars, health food stores, hotels, bars, restaurants, cafeterias, ice cream shops, institutions and hospitals…

High output: just cut your citrus half and press. You will extract easily from 20 to 40 liters per hour (5 to 10 gallons).

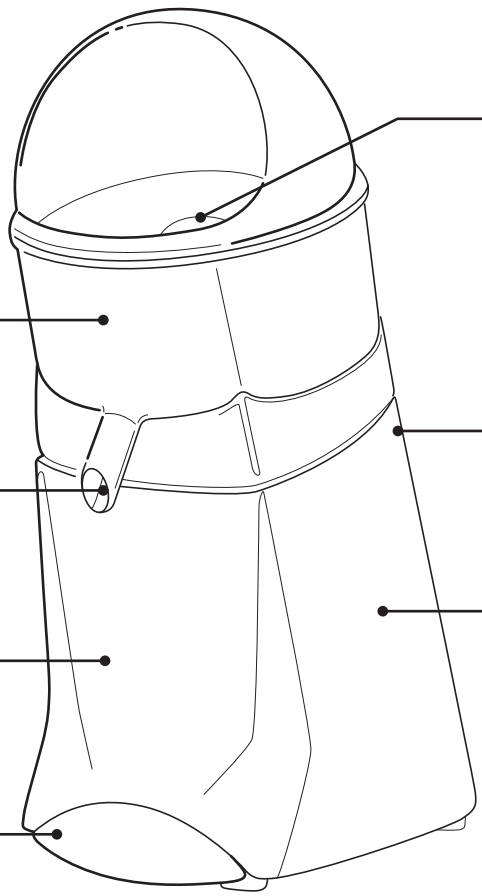

Stainless steel removable bowl
Unbreakable - food material

Wide spout accepting all types of glasses and jugs
Height of the spout: 212mm (8.3")

Aluminium body

Rubber front base

3 removable squeezers
(cones) for:
- Limes
- Lemons and oranges
- Grapefruits



Inclined body for better output

Heavy duty
and quiet asynchronous motor
High speed



Output up to **40** l/h

THE COMPLETE RANGE OF THE CITRUS JUICER #52

52C



52G



CHOOSE
YOUR COLOUR!

CITRUS JUICER #52

EASY TO USE - EASY TO CLEAN - COMPLETELY SAFE

www.santos.fr



The unique juicer that you can clean quickly and easily:
just wash the main different parts of the top.
All these parts are easily removable from the base in a simple movement.



TECHNICAL SPECIFICATIONS

Motor

Single phase: 100 - 120V - 50/60 Hz - 260 W - CE, UL, NSF
220-240V – 50/60Hz – 230W – CE, KC

Speed: 1 500 rpm (50 Hz)
1 800 rpm (60 Hz)

Weight

Net: 9,5 Kg (21 lbs)
Packed: 10,5 Kg (23 lbs)

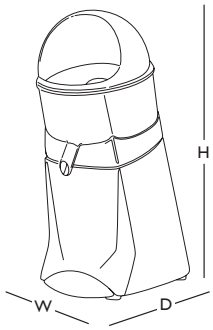

APPLIANCE
W: 205mm / 8"
D: 305mm / 12"
H: 490mm / 19"

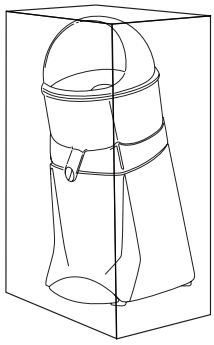

SHIPPING BOX
W: 250mm / 9,8"
D: 300mm / 11,8"
H: 585mm / 23 "

SAFETY - STANDARDS - HYGIENE

In accordance with the following regulations:
Machinery directive 2006/42/EC
Electromagnetic compatibility 2004/108/EC
RoHS directive 2002/95/EC
"Low voltage" Directive 2006/95/EC
Regulation 1935/2004/EC (contact with food)

Harmonized European standards
EN 12100-1 and 2: 2004 - EN 60204-1: 2006
EN 60335-2-64: 2004 Commercial electric kitchen machines

CE (European standards),
NSF (USA), UL (USA) and cUL (Canada), KC (Korea)

Electrical safety
- On/Off interlock switch is waterproof
- All mechanical parts are ground (earth) connected
- All equipment is 100% tested at the end of assembly (special electrical testing bay)

Thermal safety
Motor protected by internal thermal detector.

Acoustic safety
The asynchronous motor with direct driving is particularly silent.

Hygiene
All removable parts can be put in a dishwasher or easily cleaned with hot soapy water (NSF approved).

PRODUCT: 2-YEAR WARRANTY | **MOTOR:** 5-YEAR WARRANTY

CITRUS JUICER #52

www.santos.fr

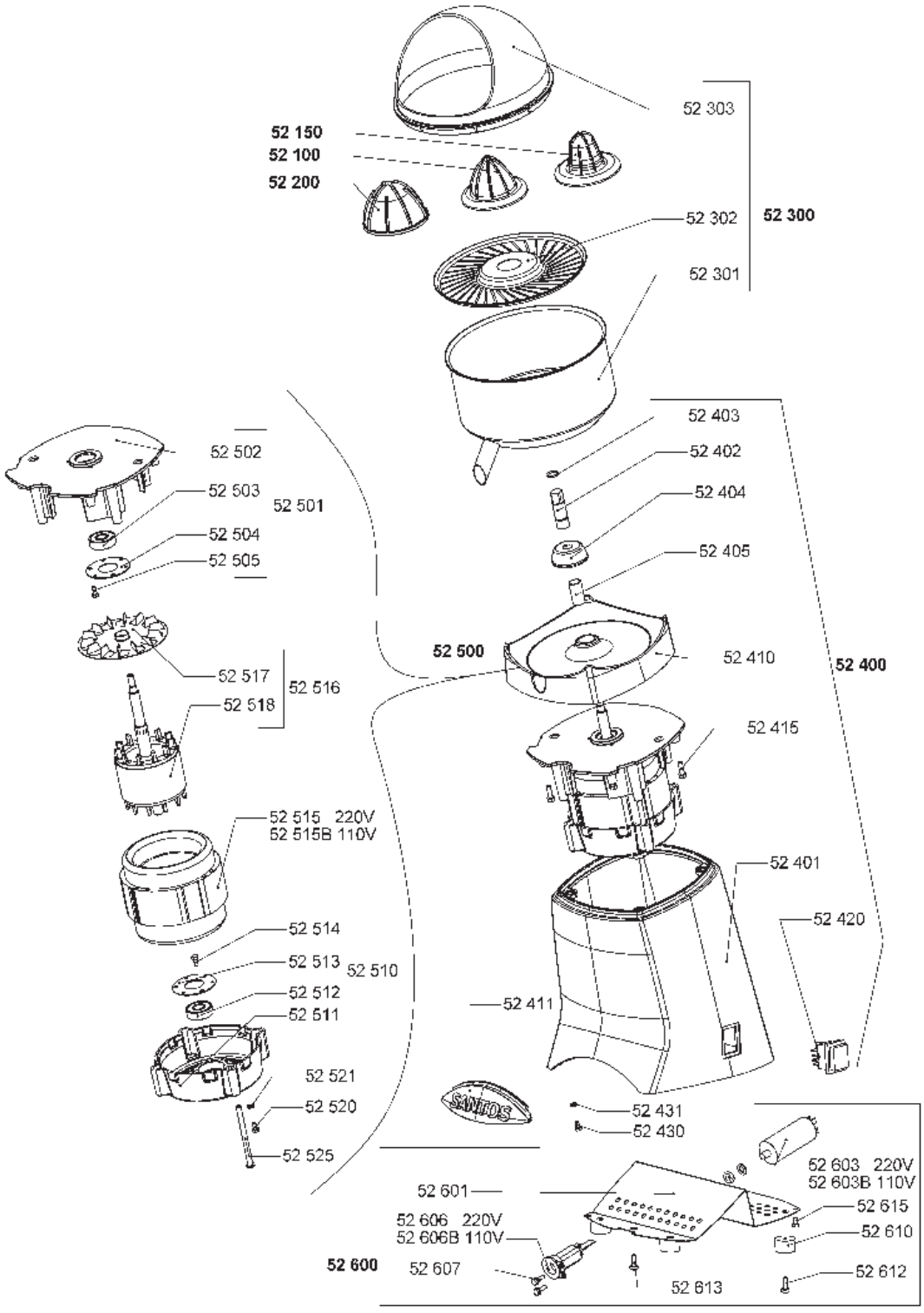

SANTOS

140-150 Avenue Roger Salengro BP 80 067 – 69511 Vaulx-en-velin Cedex (Lyon) – FRANCE

Tel. +33 4 72 37 35 29 – Fax. +33 4 78 26 58 21 – **Website:** www.santos.fr – **Email:** santos@santos.fr

Follow us on #SantosAddict social networks

05/2015 – V10