SANTOS®

CITRUS JUICER #38



handmade
IN FRANCE

Internationally
patented models

RoHS COMPLIANT 2011/65/EU
CE
c UL us LISTED
NSF

A heavy duty citrus juicer

Equipped with a sturdy and quiet asynchronous motor, the real commercial juicer #38 is built to last.

Thanks to its 3 removable squeezers, it extracts juice from all types of citrus fruits such as lemons, oranges and grapefruits.

Its body is inclined for a better juice flow and its wide and high spout accepts all types of glasses.

30 l/h

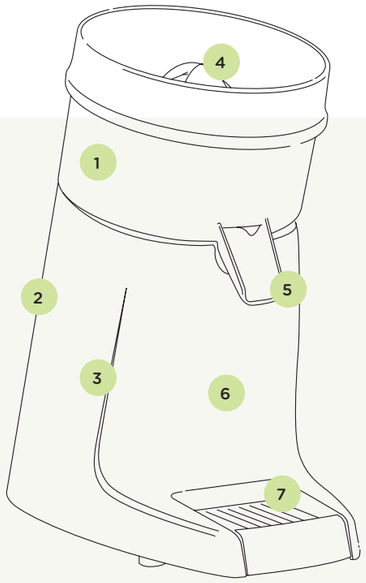

Colors



Ref 38



Ref 38C



Ref 38G

1 **Removable** bowl

2 Inclined body

3 Aluminium base

4 **Removable** squeezers

5 **Wide spout** for all types of glasses. Height: 135mm (5")

6 **Asynchronous** commercial motor

7 **Removable** drip tray



Easy to use and clean

All parts in contact with fruits are removable, which allows a simple and quick cleaning.

1 Squeezer
2 Ornamental ring
3 Filter grid
4 Bowl

Delivered with 3 squeezers: limes, lemons, oranges and grapefruits and 1 cover

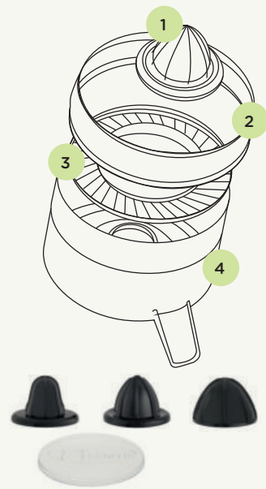



The professional art of juicing
Since 1954

We have the juicer adapted to your needs, to make juice by the glass or in a jug.
Equipped with professional, robust and powerful motors, they are designed to quickly press all types of citrus.
They are very easy to clean: all parts in contact with food are removable.



Safety, standards, hygiene

In accordance with the following regulations	Machinery directive 2006 / 42 / EC
	Electromagnetic compatibility 2014 / 30 / EU
	''Low voltage'' directive 2014 / 35 / EU
	RoHS directive 2011 / 65 / EU
	Regulation 1935 / 2004 / EC (contact with food)
	WEEE Directive 2012/19/EU
Harmonized European Standards	EN 1672-2+A1:2009
	EN ISO 12100:2010
	EN 60204-1+A1:2009
	EN 60335-2-64:2004 Commercial electric kitchen machines
	CE Marking, UL (USA) and cUL (Canada), NSF (USA)
Thermal safety	Motor protected by internal thermal detector and overload protector
Electrical safety	All mechanical parts are ground connected
	Appliances are 100% tested after assembly
Acoustic Safety	Silent asynchronous motor
Hygiene	All removable parts can be put in a dishwasher or easily cleaned with hot soapy water

Technical specifications

Motor
Single phase:
220-240 V - 50/60 Hz - 130 W - CE
100-120 V - 50/60 Hz - 155 W - CE, NSF, UL

Speed:
1 500 rpm (50 Hz)
1 800 rpm (60 Hz)

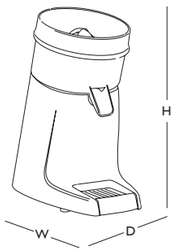

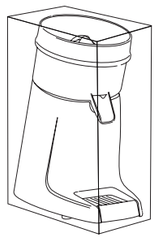

Appliance
W: 170 mm (7'')
D: 303 mm (12'')
H: 350 mm (14'')

Weight:
5,2 Kg (11,5 lbs)

Shipping box
W: 255 mm (10'')
D: 340 mm (13'')
H: 400 mm (16'')

Weight:
6 Kg (13,2 lbs)

PRODUCT: 2-YEAR WARRANTY | **MOTOR**: 5-YEAR WARRANTY

SANTOS Citrus Juicer #38
From date: 11/2017
From serial number: 1039170

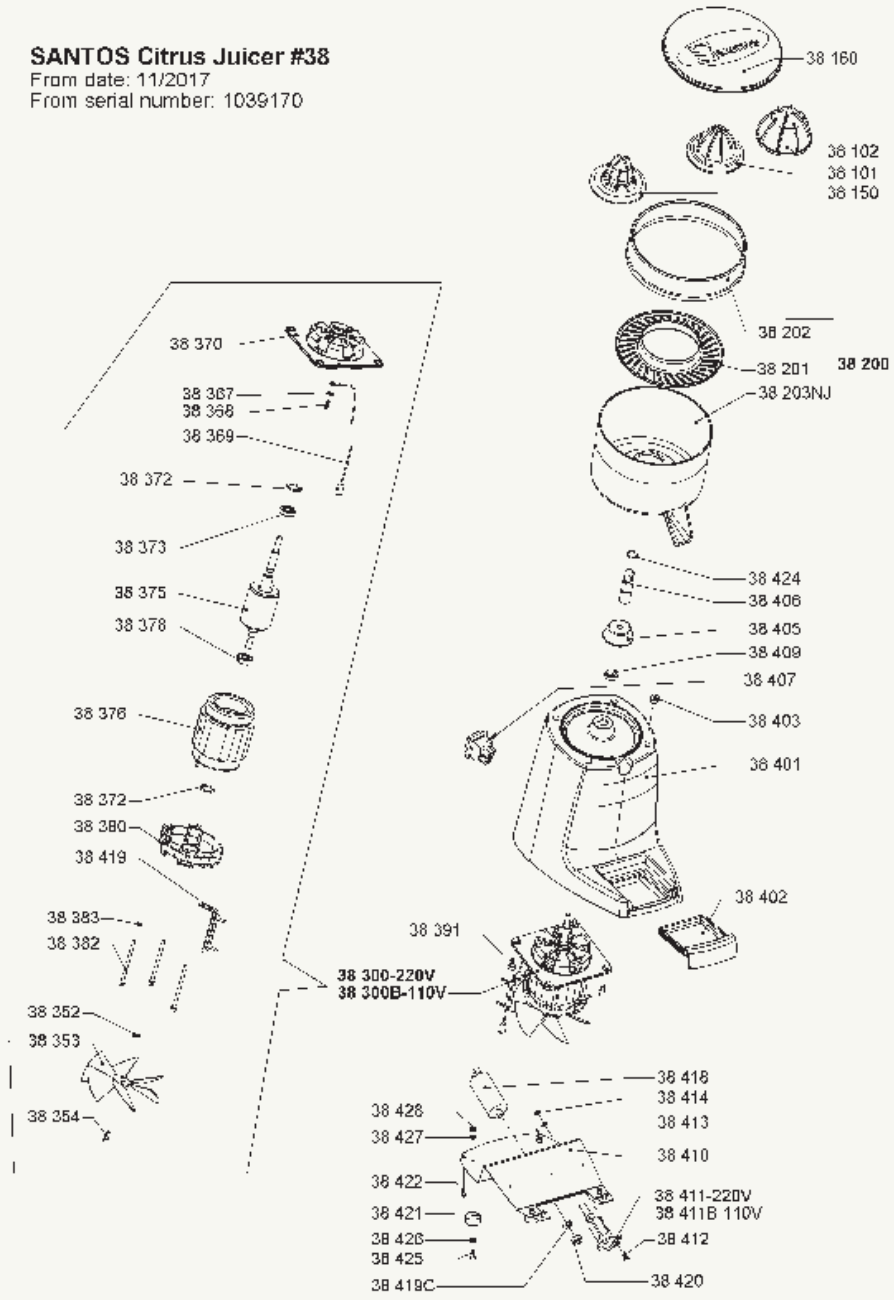

06/2020 - V7 | graphic design : Tumulte

SANTOS
140-150 avenue Roger Salengro
BP 80 067
69511 Vaulx-en-Velin Cedex (Lyon) FRANCE

Tel: +33 472 37 35 29
Fax: +33 478 26 58 21
Email: santos@santos.fr
www.santos.fr

Follow us on **#santosaddict** social networks