

Catalogue
FOOD SERVICE
Chapter
COOKING

Specific model
FT-E705 C L 400V 3N 50/60Hz

19101116 04/09/2023

DENOMINATION:

Electric frytop with thermostatic temperature control, chrome surface ribbed hot-plate, half module, 700 range.

DESCRIPTION :

"- Stamped surface tops manufactured in 1.5 mm thick AISI-304 stainless steel.
- Laser-cut joints, automatic welding and polishing. Hidden screws.
- Rapid reaction and recovery times of the fry-top temperature.
- The fry tops are welded to the stamped surface top.
- The stamped shell and its rounded edges
and corners make cleaning much easier.
- The fry top is tilted towards the front to make it easier to collect grease and liquids.
- Fitted with an opening to collect cooking grease and a tray to store it which has capacity to store up to 2 litres
depending on the model.
- Optional anti-splash side and rear guards, easy to remove.
- High-temperature enamelled cast iron flue protector.
- Access to components from the front.
- Machines with IPX5 grade water protection.
"
- Model with smooth hot plates.
"- 15 mm thick mild steel fry tops which are quick-heating and high power.
- Version with 50-micron thick chrome surface for the three hot plate types."
- Electrically heated models with stainless steel heating elements; thermostatic temperature control, between 100 and 300 °C.
- Whole-module fry tops have two separate heating areas.

POSSIBLE OPTIONS :

- 230 1N- Transformation A 230 V single phase
- 230 III - A 230 V three-phase transformation without neutral
- MARINE - Other machines - Ship transformation - 440 III

POSSIBLE ACCESSORIES :

- ACCESSORIES KORE
- STANDS 700
- FRY-TOP ACCESSORIES KORE
- TALL CHIMNEY KORE

SUPPLIED ACCESSORIES:

- 19045083 Scraper for fry-top generación Kore 1

DIMENSIONS

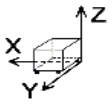

X Width	400 mm	X Gross width	440 mm
Y Depth	730 mm	Y Gross depth	822 mm
Z Height	290 mm	Z Gross height	535 mm
Net Weight	70,0 kg	Gross Weight	83,0 kg
Net volume	0,080 m3	Gross volume	0,193 m3

ELECTRICITY TECHNICAL SPECIFICATIONS

Electric power	5,000 kW
Amperage (A)	7,3A
Heating power	5,00 kW
Voltage	400V - 3N
Electric frequency	50/60Hz

CONNECTIONS TECHNICAL SPECIFICATIONS

230 V three-phase wiring	3X2,5MM2+T
Single-phase 230V wiring	2X4MM2+T
Three-phase +N 400V wiring	3X1,5MM2+T+N



Catalogue
FOOD SERVICE
Chapter
COOKING

Specific model
FT-E705 C L 400V 3N 50/60Hz

19101116 04/09/2023

FT-E705

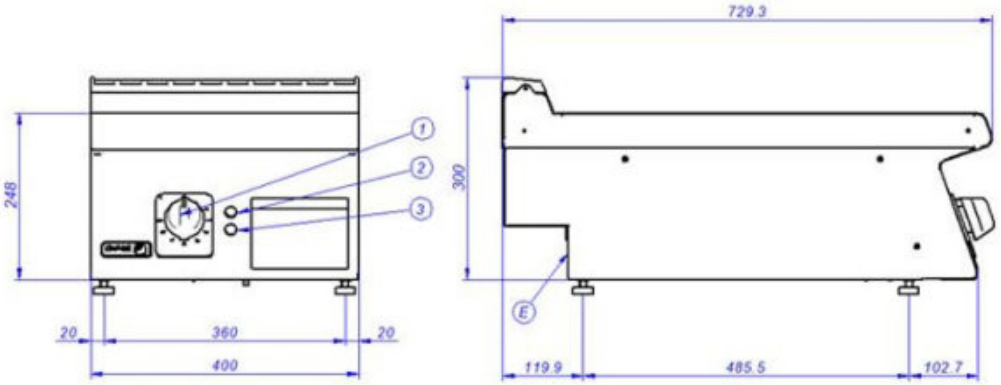

FT-E710

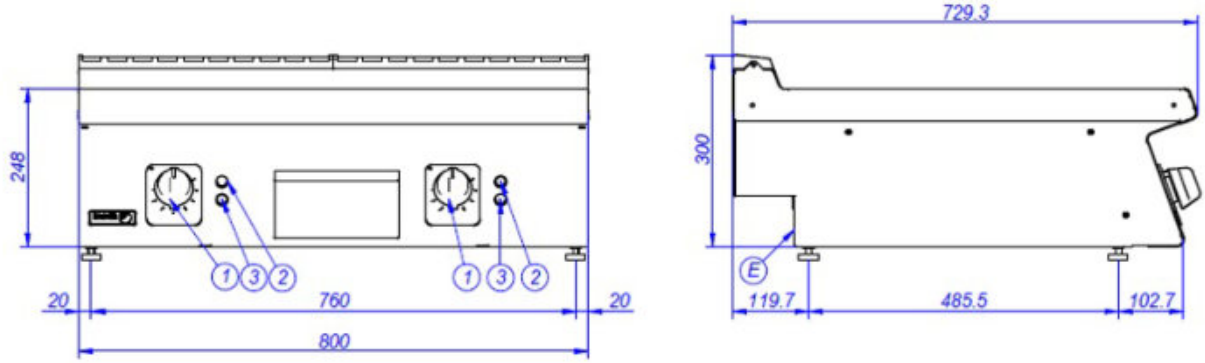

E – Conexión eléctrica	Electrical connection	Connexion électrique
1 – Mando termostato	Thermostat control	Commande de thermostat
2 – Piloto verde	Green pilot	Lumière verte
3 – Piloto ámbar	Ambar pilot	Lumière ambre