

Catalogue
FOOD SERVICE
Chapter
COOKING

Specific model
C-E761 400V 3N 50/60Hz

19068645 04/09/2023

DENOMINATION:

Electric cooker with oven, 4 rounded plates, 700 range.

DESCRIPTION :

"- Pressed surface tops manufactured in 1.5 mm thick AISI-304 stainless steel, with rounded edges, designed to prevent spilled liquid from pans from entering the interior of the oven.
- Stamped surface top with rounded corners for easy cleaning.
- Laser-cut joints and automatic welding. Hidden screws.
- Cast iron hot plates,
- Power regulation via selector with 7 positions.
- Protection against overheating for each plate.
- High-temperature enamelled cast iron flue protector.
- Access to components from the front.
- Easy connection and compliant with health standards.
- Machines with IPX5 grade water protection.

"- Static electric oven with dimensions GN 2/1.
- Heating through stainless steel heating elements with selector switch for operation of the upper and/or inner part.
- Cooking chamber made entirely of stainless steel which makes cleaning easier and ensures greater hygiene.
- Trays are inserted sideways which improves manoeuvrability.
- Thermostatic valve for temperature control (125 - 310 °C).
- Rails on three height levels to offer different cooking options.
- Rails with anti-tipping system to prevent trays from overturning.
- Cast iron oven floor which guarantees better performance and uniform heat distribution.
- Fibreglass closing seal to improve the thermal efficiency of the oven and ensure its durability.
- Stamped oven frame and inner door, ensuring a better oven closure.
- Detachable oven door to facilitate repairs."
-Cast iron round hot plates, 223 Ø (2.6 kW), hermetically fixed to the stamped surface top.

POSSIBLE OPTIONS :

- 230 1N- Transformation A 230 V single phase
- 230 III - A 230 V three-phase transformation without neutral
- MARINE - Other machines - Ship transformation - 440 III

POSSIBLE ACCESSORIES :

- COOKER ACCESSORIES KORE
- KORE WHEELS
- TALL CHIMNEY KORE

DIMENSIONS

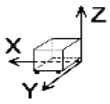

X Width	800 mm	X Gross width	840 mm
Y Depth	730 mm	Y Gross depth	822 mm
Z Height	850 mm	Z Gross height	1255 mm
Net Weight	90,0 kg	Gross Weight	108,0 kg
Net volume	0,500 m3	Gross volume	0,867 m3

ELECTRICITY TECHNICAL SPECIFICATIONS

Electric power	21,600 kW
Amperage (A)	31,3A
Heating power	21,60 kW
Voltage	400V - 3N
Electric frequency	50/60Hz

CONNECTIONS TECHNICAL SPECIFICATIONS

230 V three-phase wiring	3X10+T - 63 A
	3X16MM2+T
Single-phase 230V wiring	2X35MM2+T
Three-phase +N 400V wiring	3X6MM2+T+N



Catalogue
FOOD SERVICE
Chapter
COOKING

Specific model
C-E761 400V 3N 50/60Hz

19068645 04/09/2023

C-E761

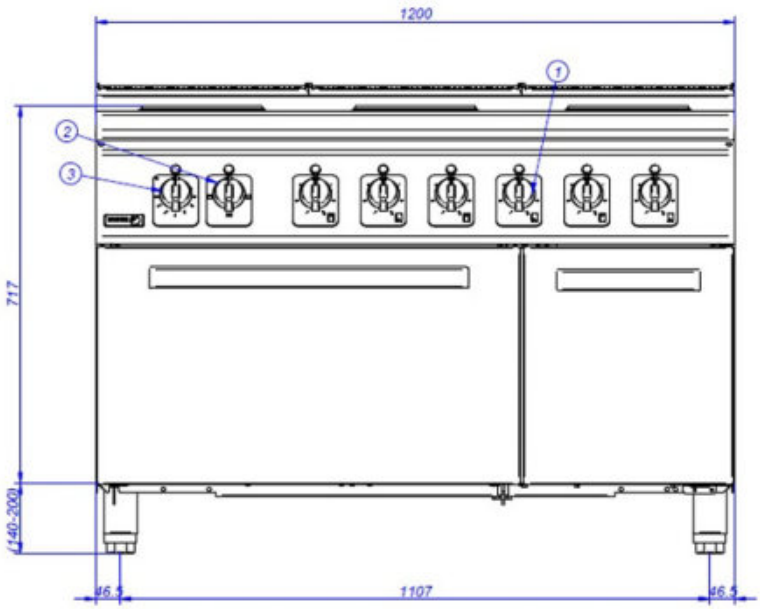

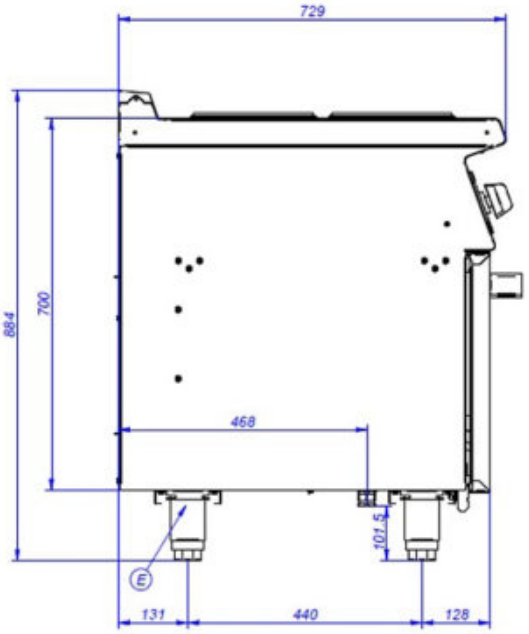

E. Conexión eléctrica
1. Mando placas M
2. Mando horno 1
3. Mando horno 2

Electrical connection
M plates control
Oven control 1
Oven control 2