XFT110

ЭЛЕКТРИЧЕСКИЙ



Вместимость	3 460x330
Расстояние	75 mm
Частота	50 / 60 Hz
Напряжение	230 V~ 1N
Мощность	3 kW
Размеры	600x651x429 mm
Вес	25 kg

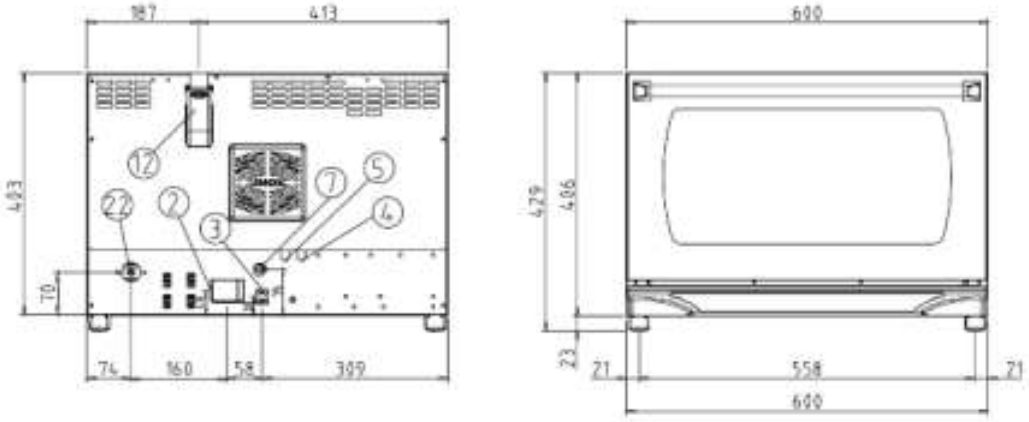
187
413
600
483
479
406
70
74
160
58
389
23
21
558
21
600

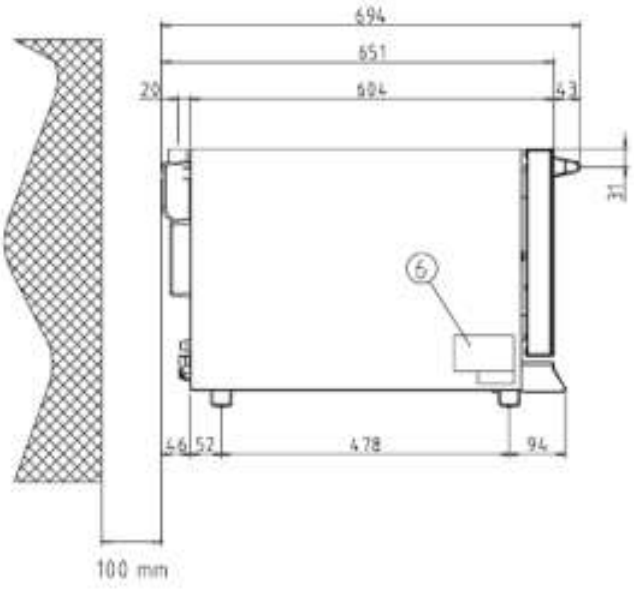
694
651
29
604
43
31
66
52
478
94
100 mm

■ :Standard □ :Optional - :Not available	MATIC	DYNAMIC	CLASSIC	MANUAL HUM.
BAKING MODES				
Convection baking 30 °C - 260 °C	■	■	■	■
Mixed humidity and convection baking 90 °C - 260 °C	■	■	-	■
AIR DISTRIBUTION IN THE BAKING CHAMBER				
AIR.Plus technology: fans with reversing gear on models 600x400	■	■	■	■
AIR.Plus technology: fans with reversing gear on models 460x330	■	■	■	-
CLIMA MANAGEMENT IN THE BAKING CHAMBER				
DRY.Plus technology: quick extraction of the humidity from the baking chamber	■	■	■	■
STEAM.Plus technology: humidity injection that can be set from the control panel with 20% increment	■	■	-	-
STEAM.Plus technology: manual humidity injection	-	-	-	■
Pump that allows the oven to draw water from the tank (for models 460x330)	■	■	-	■
Solenoid valve that allows the connection between oven and water directly (for models 600x400)	■	■	-	■
PANS				
Aluminium flat pans (for models 460x330)	■	■	■	■
AUXILIARY FUNCTIONS				
99 baking programs memory, each one made up of 3 baking steps + pre-heating	■	■	■	-
Protek.SAFE™ technology: maximum thermal efficiency and working safety (cool door glass and external surfaces)	■	■	■	■
Visualisation of the residual baking time	■	■	■	■
Continuous functioning «INF»	■	■	■	■
Visualisation of the set and real temperature values in the oven chamber	■	■	■	-
Temperature unit that can be set in °C or °F	■	■	■	-
DOOR OPENING				
Manual door opening from top to bottom	-	■	■	■
Flag opening door from right to left	■	-	-	-
Automatic door opening at the end of the baking process	■	-	-	-
TECHNICAL DETAILS				
Rounded stainless steel chamber for hygiene and easy of cleaning	■	■	■	■
Oven chamber lighting with halogen lamp	■	■	■	■

Light weight – heavy duty structure using innovative materials	■	■	■	■
Proximity door contact switch on models 600x400	■	■	■	■
Proximity door contact switch on models 460x330	■	■	■	-
Autodiagnosys system for problems or brake down	■	■	■	-
Safety temperature switch	■	■	■	■