ICETECH®
ICE CUBE MAKERS



IT SK 25
IT SK 35
IT SK 45
IT SK 60
IT SK 80
IT SK 135



IT SK 25 | IT SK 35 | IT SK 45 | IT SK 60 | IT SK 80 | IT SK 135

GENERAL FEATURES

ICE TECH SK series are designed for the hospitality industry: bars, restaurants, pubs... incorporating innovative features.

ICE TECH SK gourmet full ice cube is the most desired ice cube either for the professional or consumer. Ideal to be used with soft drinks and spirtis.

ICE TECH SK ice cubes melt very slowly, allowing customers to enjoy cooled drinks longer.

A nice and esthetic external high quality. Finishing with integrated door improves machine cleanliness.

HCFC free foam injected polyurethane for outstanding insulation, **ICE TECH SK**, machine will preserve the consistency and the quality of the ice produced, longer than any other machine.

All parts in contact with water have been designed in order to minimize their friction and to ensure maximum surface tension, reducing substantially the sound level.

TECHNICAL FEATURES / OPERATING LIMITS

Ice Cube	M 22gr. L 34gr. IT SK 25 produce S size cube, 14gr.
Body	Steel SK
Spray System	With special flexible spray nozzles **ICE TECH** patented and designed to prevent the calcareous buildup.
Electromechanic Controls	Machines are timer and thermostat operated. Simple, easy to understand an service. High reliability and low spare parts cost.
Switch	External On/Off switch.
Tropicalized Machines	Classe T
Range	Air temperature: 5 – 40ºC Water temperature: 5 – 35ºC Pressure: 0,7 – 6 bar
Ice Production Capacity	Kg/24h at Ambient temperature 15ºC, Water temperature 10ºC
Certification	ISO 9001, CE
Others	Refrigerant R404 Water inlet connection 3/4” Gas Drain 20mm. connection. Single-phase input 220V–50Hz. / Optional: 220V-60Hz.

Ice Intelligence.

IT SK 25
IT SK 35
IT SK 45
IT SK 60
IT SK 80
IT SK 135

GOURMET FULL ICE CUBES

S
14gr.
Only IT SK 25

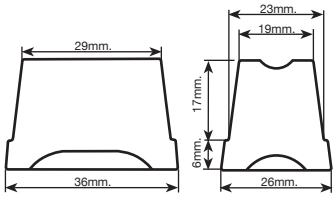

M
22gr.

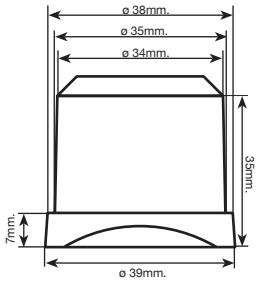

L
34gr.

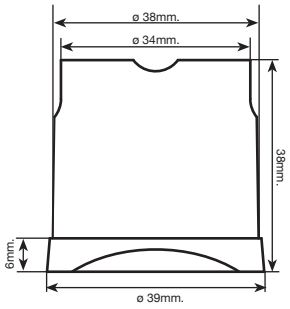

INSTALLATION SCHEME / mm.

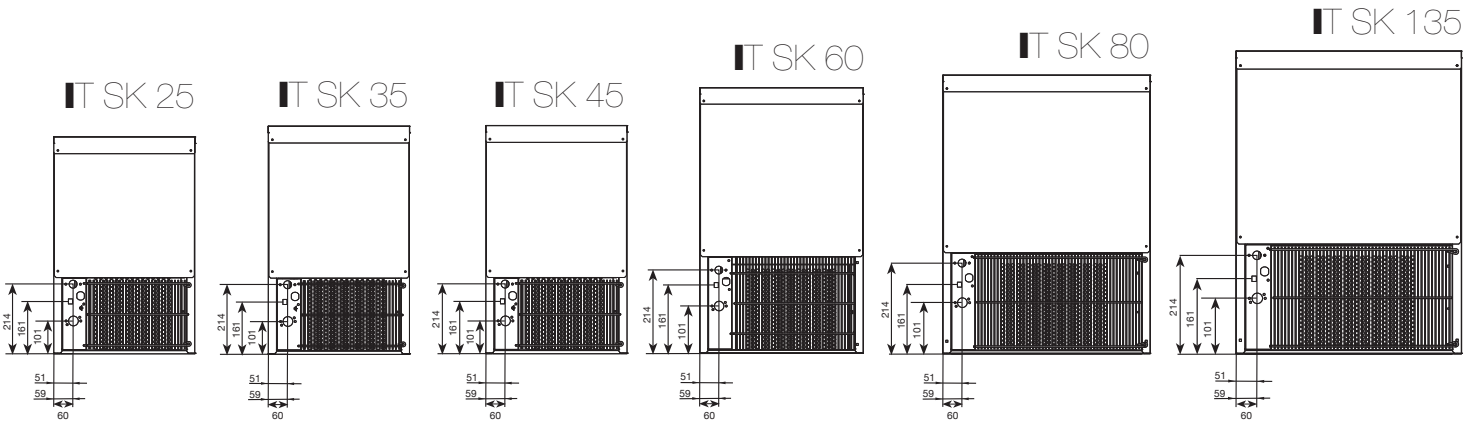

RANGE

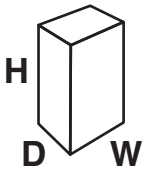

Model	Ice Cube	Condensation System	Production Kg. / Day	Storage Kg.	Maximum Power Input W.	WIDTH x DEPTH x HEIGHT Dimensions mm.	Refrigerant R404 Gr.
ICE TECH SK 25	S	Air	22	6	360	350 x 475 x 590	300
		Water	25	6	360		230
ICE TECH SK 35	M, L	Air	33	15	400	435 x 605 x 695	220
		Water	35	15	400		210
ICE TECH SK 45	M, L	Air	42	15	450	435 x 605 x 695	225
		Water	44	15	450		210
ICE TECH SK 60	M, L	Air	54	30	460	515 x 645 x 840	250
		Water	57	30	460		220
ICE TECH SK 80	M, L	Air	75	40	720	645 x 645 x 870	280
		Water	81	40	720		300
ICE TECH SK 135	M, L	Air	135	60	1150	930 x 565 x 915	500
		Water	137	60	1150		340

ICETECH
ICE CUBE MAKERS

ICE TECH ICE CUBE MAKERS
P.I. LA REVA, AV.GREMIS 1
46190 RIBARROJA-VALENCIA-SPAIN
PHONE: +34 961 667 636 FAX: +34 961 668 944
www.icetechice.com / sales@icetechice.com

SPRAY SYSTEM



ISO 9001

Ice Intelligence.

C/3914-22/E/14