

Catalogue
FOOD SERVICE
Chapter
DISHWASHING

Specific model
CCO-180 L CW 380-415V 3N 50Hz

19047209 12/06/2024

DENOMINATION:

Modular rack conveyor 180 racks/hour with entrance from the feft for cold water

DESCRIPTION :

"-The Concept modular dishwashers are composed of different modules put together, which carry out different operations, making up the washing process.
- All the main parts are manufactured in AISI-304 anti-corrosion stainless steel: tanks, washing and rinsing arms, rinsing jets, doors, basket conveyance system, boiler and metal tubes.
- Upwards-opening double panel door.
- Tank tray filters made of AISI-304 stainless steel, easy to access and remove for cleaning and access to the tank.
- Safety filter for pump suction.
- Rinsing boiler with heat insulation.
- Easy access for installation. Electrovalve located on one side (no need to remove panels to connect the machine).
- Electrical panel designed for easy connection of dosers for liquid and solid detergents, rinse aid, limit switches, supplementary emergency stop button.
- Washing arms easily removable as a set, for cleaning, with a plug on each branch providing access for cleaning inside.
- Rinse jets easily dismountable and removable.
- System of electronic regulation of speeds by means of frequency shifter.
- Configurable electronic temperature control:
- Wash (50 - 65 °C)
- Rinse (70 - 85 °C)
- Guarantor of rinse at 85 °C.
- Pressure regulator for flow control.
- Emergency stop button incorporated.
- Extra anti-entrapment protection system at the entrance, mounted on the AS-260 splash guard supplement (optional).
- Open door blocking system.
- IPX4 protection system.
- System for detection of blockage of conveyor carriage and automatic reverse function.
- Energy-saving system: reduces consumption by halting operation of the pumps, and by passing the heating of the rinse to stand-by mode (70 °C).
- Auto-timer which deactivates the conveyor motor after a pre-set period of inactivity (10 minutes)."
- AS-260 splash guard supplement.
- High-power washing system with 5 upper and 5 lower washing branches.
- Rinse and pre-rinse, both double effect.
- 3 programs 90, 135 and 180 baskets/hour.
Entry through the left part of the machine.
CW: Model prepared for connection with cold water from the network (input temperature <(><<)>50 ºC.).

POSSIBLE OPTIONS :

- Electric trasformation to 230V three-phase without neutral (230V 3 ~)
- Electric trasformation to marine version (440V 3~ 60 Hz.)
- Drying tunnel
- Upper energy recovery system
- Anti-splash guard supplement (exit)

DIMENSIONS

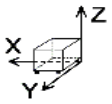

X Width	1760 mm	X Gross width	1850 mm
Y Depth	790 mm	Y Gross depth	955 mm
Z Height	1560 mm	Z Gross height	1950 mm
Net Weight	259,0 kg	Gross Weight	382,0 kg
Net volume	2,529 m3	Gross volume	3,445 m3

ELECTRICITY TECHNICAL SPECIFICATIONS

Electric power	34,900 kW
Voltage	380-415V
Phases	3N
Electric frequency	50Hz
Amperage (A)	54,7
Engine power	2,20 kW
Heating power	32,00 kW

WATER TECHNICAL SPECIFICATIONS

Pressure	H2O: 200-400kPa(2-4bar)
Water max consumption	210,00 L/h
Maximum Temperature	Water Inlet Max Temp:60ºC

COLD TECHNICAL SPECIFICATIONS

Noise level	72,00 dB

CONNECTIONS TECHNICAL SPECIFICATIONS

230 V three-phase wiring	3X16+T - 80 A
Three-phase +N 400V wiring	4X16+T - 80 A
Drain 1 diameter	38



Catalogue
FOOD SERVICE
Chapter
DISHWASHING

Specific model
CCO-180 L CW 380-415V 3N 50Hz

19047209 12/06/2024

POSSIBLE ACCESSORIES :

- BASKETS
- BASKETS FOR DISHWASHERS
- BASKETS FOR GLASSES
- MODULAR ELEMENTS
- TABLES FOR RACK TYPE DISHWASH.

SUPPLIED ACCESSORIES:

- 19000484 Glass basket, 500x500x110 mm. 2
- 19000487 Basket for 16-18 plates, 500x500x110 mm. 2
- 19000488 Baskets for 16 glasses and cups with 110 mm diameter and 100 mm height. 1
- 19036306 Standard basket with dense base 1



Catalogue
FOOD SERVICE
Chapter
DISHWASHING

Specific model
CCO-180 L CW 380-415V 3N 50Hz

19047209 12/06/2024

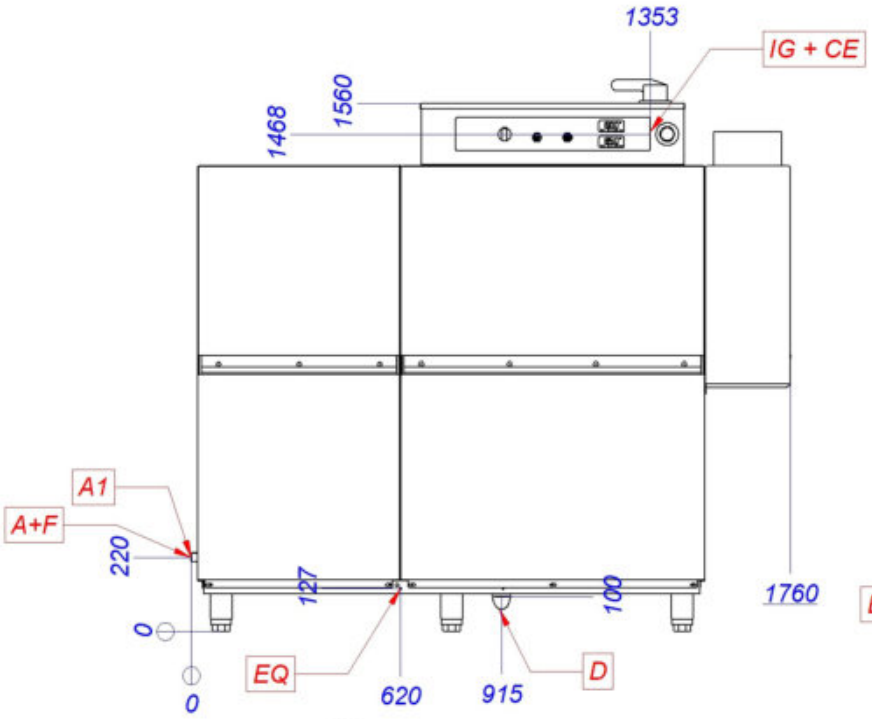

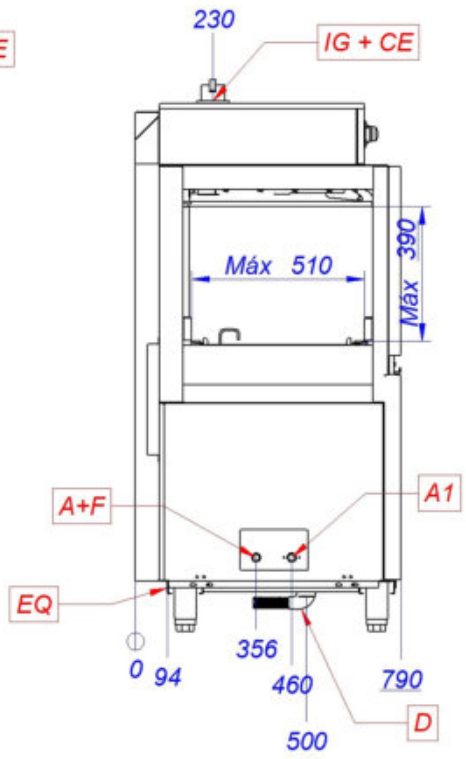

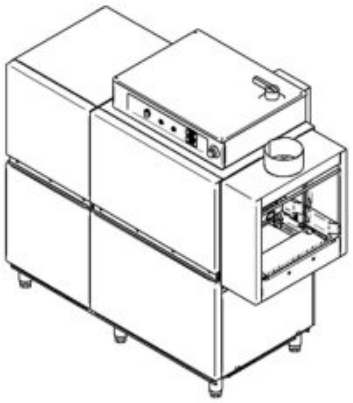

A+F	Entrada de agua + filtro	Water inlet & filter	Entrée d'eau & filtrer
A1	Válvula de llenado	Fill valve	Vanne de remplissage
CE	Alimentación eléctrica	Power supply	Connexion électrique
D	Desagüe	Drain	Vindage
EQ	Toma equipotencial	Equipotential bonding terminal	Connexion Équipotentielle
IG	Interruptor general	General switch	Interrupteur général



Catálogo
FOOD SERVICE
Capítulo
LAVADO DE VAJILLA

Modelo Específico
CDT-600 380-415V 3N 50/60Hz

19046516 12/06/2024

DENOMINACIÓN:

Túnel de secado

DESCRIPCIÓN :

- Construcción en acero inoxidable.
- Elemento suplementario con caja con resistencias de 9 kW y ventilador superior para el secado de la vajilla con motor de 0,55 kW.
- Módulo con sistema de arrastre incluido, para colocar al final de la máquina.
- Dotado de cortinas separadoras.
- Estante inferior.
- No se puede instalar en un lavavajillas dotado de antisalpicaduras de salida (ASE-260).
- Se puede instalar como máximo un secado por máquina.

DIMENSIONES

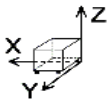

X Ancho	600 mm	X Ancho bruto	630 mm
Y Fondo	790 mm	Y Fondo bruto	955 mm
Z Alto	1930 mm	Z Alto bruto	2200 mm
Peso neto	70,0 kg	Peso bruto	105,0 kg
Volumen neto	0,572 m3	Volumen bruto	1,324 m3

ESPECIFICACIONES TÉCNICAS ELECTRICIDAD

Potencia eléctrica	9,550 kW
Voltaje	380-415 V
Fases	3N
Frecuencia eléctrica	50/60Hz
Amperaje (A)	25A
Potencia motor	0,55 kW
Potencia calentamiento	9,00 kW

ESPECIFICACIONES TÉCNICAS FRÍO

Nivel de ruido	72,00 dB

ESPECIFICACIONES TÉCNICAS ACOMETIDAS

Cableado 400V Trifásico+N	+ 9 KW



Catálogo
FOOD SERVICE
Capítulo
LAVADO DE VAJILLA

Modelo Específico
CDT-600 380-415V 3N 50/60Hz

19046516 12/06/2024

