

Catalogue
FOOD SERVICE
Chapter
DISHWASHING

Specific model
CCO-120 L CW 400V 3N 50Hz

19045325 12/06/2024

DENOMINATION:

Compact rack conveyor 120 racks/hour with entrance from the feft for cold water

DESCRIPTION :

"- All the main parts are manufactured in AISI-304 anti-corrosion stainless steel: tanks, washing and rinsing arms, rinsing jets, doors, basket conveyance system, boiler and metal tubes.
- Upwards-opening double panel door.
- Tank tray filters made of AISI-304 stainless steel, easy to access and remove for cleaning and access to the tank.
- Safety filter for pump suction.
- Rinsing boiler with heat insulation.
- Easy access for installation. Electrovalve located on one side (no need to remove panels to connect the machine).
- Electrical panel designed for easy connection of dosers for liquid and solid detergents, rinse aid, limit switches, supplementary emergency stop button.
- Washing arms easily removable as a set, for cleaning, with a plug on each branch providing access for cleaning inside.
- Rinse jets easily dismountable and removable.
- System of electronic regulation of speeds by means of frequency shifter.
- Configurable electronic temperature control:
- Wash (50 - 65 °C)
- Rinse (70 - 85 °C)
- Guarantor of rinse at 85 °C.
- Pressure regulator for flow control.
- Emergency stop button incorporated.
- Extra anti-entrapment protection system at the entrance, mounted on the AS-260 splash guard supplement (optional).
- Open door blocking system.
- IPX4 protection system.
- System for detection of blockage of conveyor carriage and automatic reverse function.
- Energy-saving system: reduces consumption by halting operation of the pumps, and by passing the heating of the rinse to stand-by mode (70 °C).
- Auto-timer which deactivates the conveyor motor after a pre-set period of inactivity (10 minutes)."
- High-power washing system with 4 upper and 4 lower washing branches.
- Double effect rinse.
- 3 programs 80, 100 and 120 baskets/hour.
Entry through the left part of the machine.
CW: Model prepared for connection with cold water from the network (input temperature <(><<)>50 ºC.).

POSSIBLE OPTIONS :

- Electric trasformation to 230V three-phase without neutral (230V 3 ~)
- Electric trasformation to marine version (440V 3~ 60 Hz.)
- Drying tunnel
- Anti-splash guard supplement (enter)
- Conveyor recovery system
- Anti-splash guard supplement (exit)

POSSIBLE ACCESSORIES :

DIMENSIONS

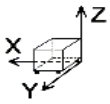

X Width	1180 mm	X Gross width	1530 mm
Y Depth	790 mm	Y Gross depth	955 mm
Z Height	1560 mm	Z Gross height	1950 mm
Net Weight	211,0 kg	Gross Weight	306,0 kg
Net volume	2,225 m3	Gross volume	2,849 m3

ELECTRICITY TECHNICAL SPECIFICATIONS

Electric power	28,550 kW
Voltage	400V
Phases	3N
Electric frequency	50Hz
Amperage (A)	46,9
Engine power	1,40 kW
Heating power	27,00 kW

WATER TECHNICAL SPECIFICATIONS

Pressure	H2O: 200-400kPa(2-4bar)
Water max consumption	210,00 L/h
Maximum Temperature	Water Inlet Max Temp:60ºC

CONNECTIONS TECHNICAL SPECIFICATIONS

230 V three-phase wiring	3X25+T - 100 A
Three-phase +N 400V wiring	4X16+T - 63 A
Drain 1 diameter	38



Catalogue
FOOD SERVICE
Chapter
DISHWASHING

Specific model
CCO-120 L CW 400V 3N 50Hz

19045325 12/06/2024

- BASKETS
- BASKETS FOR DISHWASHERS
- BASKETS FOR GLASSES
- MODULAR ELEMENTS
- TABLES FOR RACK TYPE DISHWASH.

SUPPLIED ACCESSORIES:

- 19000484 Glass basket, 500x500x110 mm. 2
- 19000487 Basket for 16-18 plates, 500x500x110 mm. 2
- 19000488 Baskets for 16 glasses and cups with 110 mm diameter and 100 mm height. 1
- 19036306 Standard basket with dense base 1



Catalogue
FOOD SERVICE
Chapter
DISHWASHING

Specific model
CCO-120 L CW 400V 3N 50Hz

19045325 12/06/2024

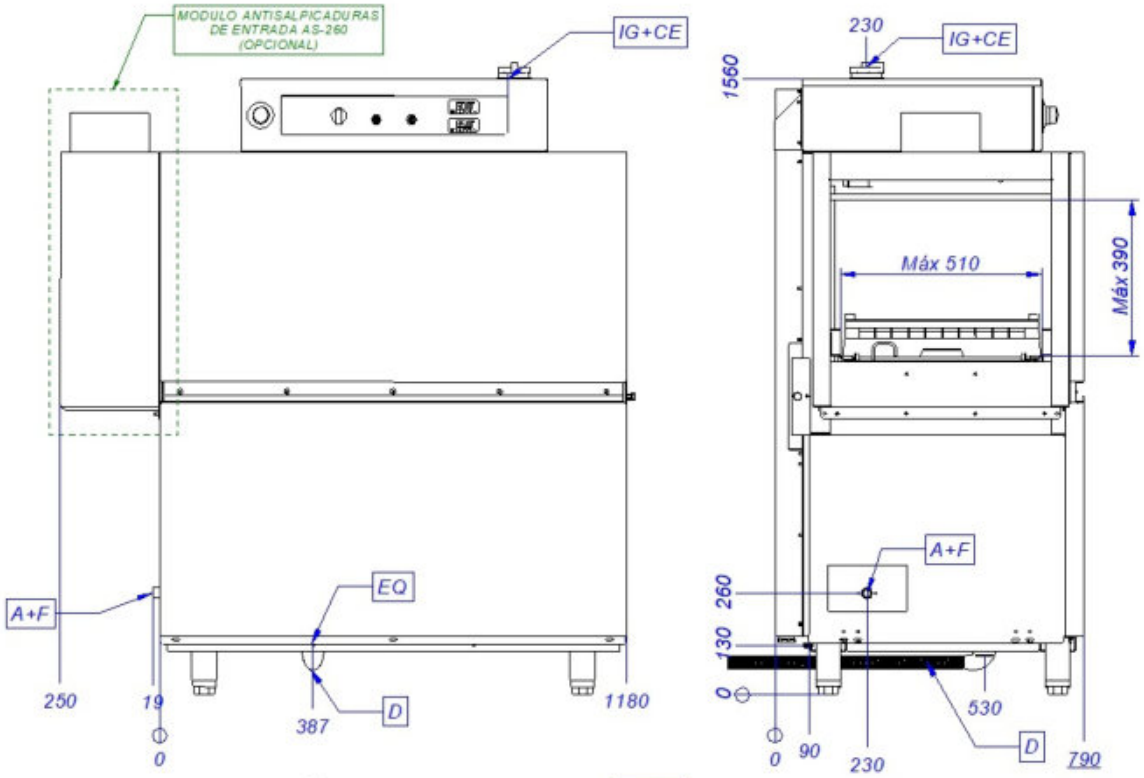

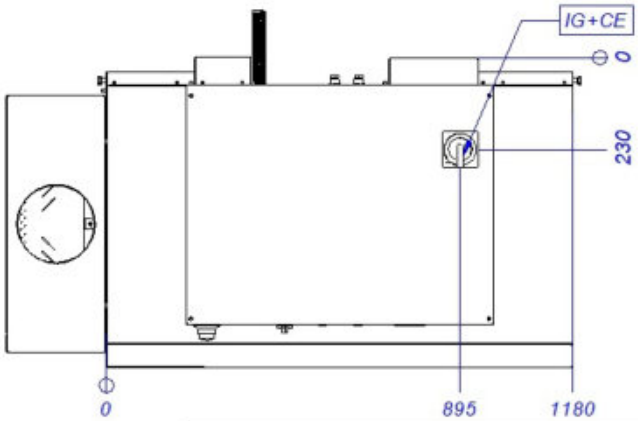



A+F	Entrada de agua + filtro	Water inlet & filter	Arrivée d'eau et filtrer
CE	Alimentación eléctrica	Power supply	Connexion électrique
D	Desagüe	Drain	Vindage
EQ	Toma equipotencial	Equipotential bonding terminal	Connexion Équipotentielle
IG	Interruptor general	General switch	Interrupteur général



Catálogo
FOOD SERVICE
Capítulo
LAVADO DE VAJILLA

Modelo Específico
CDT-600 380-415V 3N 50/60Hz

19046516 12/06/2024

DENOMINACIÓN:

Túnel de secado

DESCRIPCIÓN :

- Construcción en acero inoxidable.
- Elemento suplementario con caja con resistencias de 9 kW y ventilador superior para el secado de la vajilla con motor de 0,55 kW.
- Módulo con sistema de arrastre incluido, para colocar al final de la máquina.
- Dotado de cortinas separadoras.
- Estante inferior.
- No se puede instalar en un lavavajillas dotado de antisalpicaduras de salida (ASE-260).
- Se puede instalar como máximo un secado por máquina.

DIMENSIONES

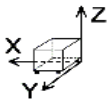

X Ancho	600 mm	X Ancho bruto	630 mm
Y Fondo	790 mm	Y Fondo bruto	955 mm
Z Alto	1930 mm	Z Alto bruto	2200 mm
Peso neto	70,0 kg	Peso bruto	105,0 kg
Volumen neto	0,572 m3	Volumen bruto	1,324 m3

ESPECIFICACIONES TÉCNICAS ELECTRICIDAD

Potencia eléctrica	9,550 kW
Voltaje	380-415 V
Fases	3N
Frecuencia eléctrica	50/60Hz
Amperaje (A)	25A
Potencia motor	0,55 kW
Potencia calentamiento	9,00 kW

ESPECIFICACIONES TÉCNICAS FRÍO

Nivel de ruido	72,00 dB

ESPECIFICACIONES TÉCNICAS ACOMETIDAS

Cableado 400V Trifásico+N	+ 9 KW



Catálogo
FOOD SERVICE
Capítulo
LAVADO DE VAJILLA

Modelo Específico
CDT-600 380-415V 3N 50/60Hz

19046516 12/06/2024

