SILANOS®
LAVASTOVIGLIE INDUSTRIALI

Dishwasher E50



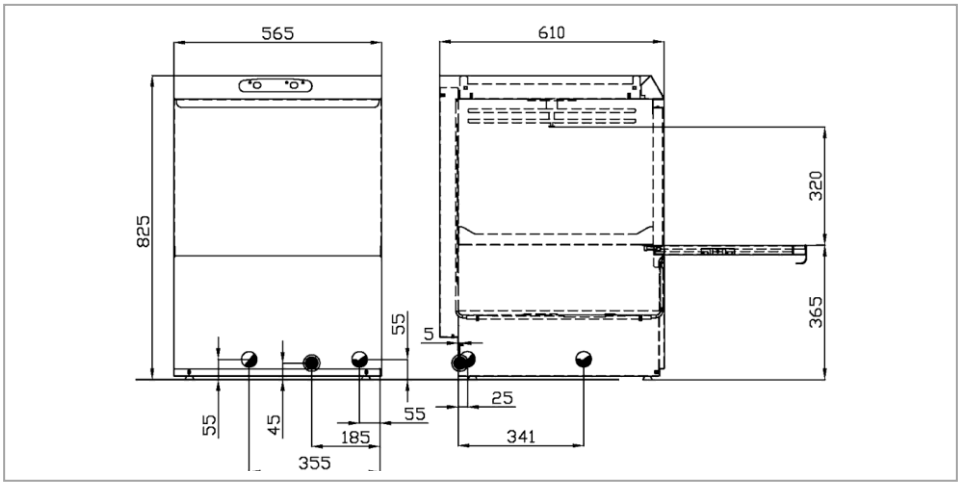

FEATURES

- Double skinned stainless-steel door.
- Specially designed stainless steel, indented anti-clog wash and rinse arms, easily removed for cleaning, without tools.
- Integral rinse aid dosing.
- Mechanical control panel.
- Micro switch door.
- Stainless steel wash tank easy clean filter inside the sump for hygiene and easy maintenance.
- 32 cm wash height.

TECHNICAL INFORMATION

	codes 100005 - 100006			
Mechanical control panel	*(sec.)*	*Baskets/h*	*Dishes/h*	*Glasses/h*
Cycle time *	120	32	576	1.152
or alternatively at the choice				
Cycle time *	180	20	360	720
Basket size	500 x 500 mm			
Wash pump: power / capacity	0,4 kW / 261 l/min			
Elements: tank / boiler	2 kW / 3,5 kW			
or alternatively at the choice				
Elements: tank / boiler	2 kW / 4,5 kW			
Water supply: temperature / pressure / hardness	max. 55°C / 200 - 400 kPa / min. 7 max. 12°F **			
Wash temperature / rinse temperature	55°C / 85° C			
Tank capacity / boiler capacity / water consumption per cycle	26 l / 5,5 l / 2,5 l			
Total power / Voltage *(when element boiler is 3,5 kW)*	3,9 kW - 400 Volt 3/N/ 50 Hz // 230 Volt 1 ~50 Hz			
Total power / Voltage *(when element boiler is 4,5 kW)*	4,9 kW - 400 Volt 3/N/ 50 Hz // 230 Volt 1 ~50 Hz			

OPTIONAL AND EQUIPMENT

● = standard ○ = on demand

Detergent dosing (PD)	○
Drain pump (PS)	○
Rinse booster pump (PR)	○
Internal water softener (A)	○
Break tank with rinse booster pump (B)	○
Baskets	1 open rack, 1 dish rack (18), 1 cutlery basket
Pipes	1 water supply, 1 drain, 1 rinse aid dosing

* theoretical production with water supply at 50° C ** above 12° F we suggest a water softener: Please note that internal water softeners are only suitable for cold water (< 30°C)

SILANOS s.r.l. Via Grandi, 19 20096 Pioltello (Milano) ITALY T +39 029291161 F +39 029267306 info@silanos.it www.silanos.it