ZOE

SANREMO

Zoe



SANREMO
COFFEEMACHINES
made in italy

COLORED AND VERSATILE
Totally matching every type of decorative solution thanks to the possible customizations

COMPETITION *Version with shot timer and barista lights*

SED TECHNOLOGY *It guarantees an electronic dosing system through the button panel*

SAP TECHNOLOGY *It allows the semi-automatic programming of doses*

COMPLETE RANGE
Available versions: COMPETITION, SED and SAP 1,2,3 groups, "Tall" and "Compact"

SHOT TIMER
To accurately and reliably time coffee extraction (only COMPETITION)



EASY SERVICE
Easy access to the internal parts for a quick and simple technical assistance

LOW SERVICE COST
Designed to decrease the maintenance and inspection costs

SANREMO
COFFEEMACHINES

_Models

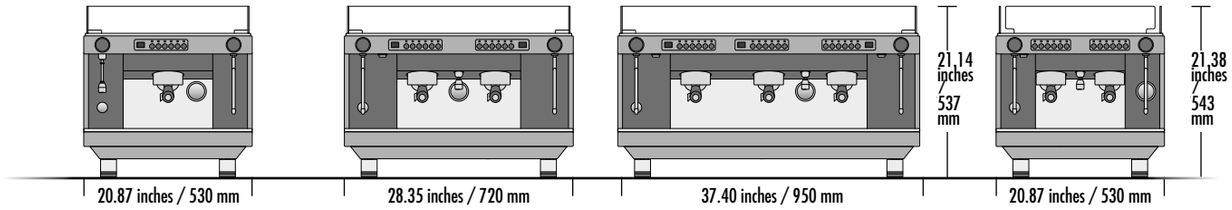

1 group	*2 group*	*3 group*	*2 group*
COMPETITION-SED-SAP	***COMPETITION-SED-SAP***	***COMPETITION-SED-SAP***	***COMPACT***
1 steam tap	2 steam taps	2 steam taps	2 steam taps
1 water tap	1 water tap	1 water tap	1 water tap
1 one-cup portafilters	1 one-cup portafilters	1 one-cup portafilters	1 one-cup portafilters
1 two-cup portafilters	2 two-cup portafilters	3 two-cup portafilters	2 two-cup portafilters



TALL VERSION
1-2-3 groups COMPETITION-SED-SAP

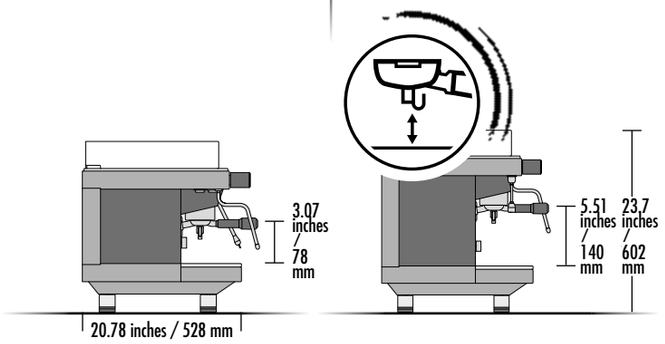

_Characteristics

ELECTRONIC AUTO-LEVEL
Through a electronic level probe the boiler is automatically filled and maintained at the right level.

ACTIVATED ELECTRONIC PRE-INFUSION
Management of the delayed activation of solenoid in the first phase of brewing.

DOUBLE READING GAUGE
It allows to control at the same time the boiler pressure and the brewing pressure.

EASY SERVICE
Easy access to the internal parts for a quick and easy technical assistance.

AUTOMATIC CLEANING CYCLE
Process to clean the coffee groups.

LED LIGHT OF THE WORKING AREA
It allows to effectively work in any lighting condition. (only COMPETITION)

_Optional

AUTOSTEAM
Steam pipe characterized by an electronic system that allows to froth and or heat milk at the set temperature.

CUP HEATER
Dedicated resistor to keep all the cups at the optimal temperature.

EXTERNAL VOLUMETRIC PUMP

BLUETOOTH COMMUNICATION SYSTEM

NAKED PORTAFILTERS

_Technical data

		1 group	2 group	3 group	compact
voltage	V		220-240 1N / 280-415 3N		
power imput	kW	2.3	3.3	6	2.7
steam boiler capacity	US gal / lt	1.19 / 4.5	2.64 / 10	3.7 / 14	1.85 / 7
steam boiler power	kW	2.15	2.95	5.6	2.5
pump power	kW	0.13	0.13	0.13	0.13
net weight	lb / kg	90 / 41	121 / 55	152 / 69	99 / 45

CE

Zoe
Link to the website

_Colors

	Black	RAL 9005
	White|Black	RAL 9003|9005
	White|Matte black	RAL 9003|9005
	White|Red	RAL 9003|3002

PERSONALISED GRAPHICS

Customization of internal panels with graphics and colors (on request).

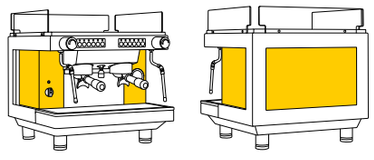

For more information about our coffee machines please contact us at export@sanremomachines.com

SANREMO
COFFEEMACHINES

SANREMO coffee machines s.r.l.
Via Giacomo Bortolan 52
31050 Vascon di Carbonera [TV] – ITALY
T +39 0422 448900
F +39 0422 448935
www.sanremomachines.com