# CB 425

Ice Cube



## Undercounter ice maker up to 49 kg - Sprayer system

| | |
|---|---|
| Hotel | ■ |
| Restaurant | ■ |
| Fast food | ■ |
| Bar | ■ |
| Disco | ■ |
| Fish market | |
| Supermarket | |
| Medical & SPA | |
| Industry | ■ |

### ▶ Position n°



### ▶ Features & Plus

- Compact and crystal cube
- AISI 304 SS Scotch Brite finish
- Tropical class +43°C
- Adjustable Stainless Steel feet
- Removable and cleanable air filter
- Air or water cooling system
- Easy cleanable internal rounded surfaces
- HCFC-Free insulated storage
- RoHS Free
- Disappearing insulated door
- Electromechanical operation
- ON-OFF rocker switch
- Standard and special voltages



AISI 304 SS Scotch Brite finish

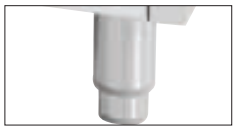

Adjustable Stainless Steel feet



Removable and cleanable air filter



Disappearing insulated door

### ▶ Available ice cube size

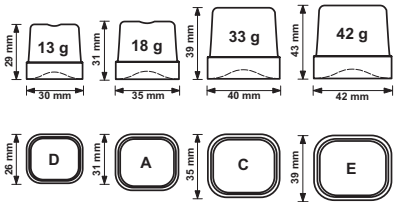


### ▶ Prod. 24h

| Air temp. | | Water temp. | | kg | lbs |
|---|---|---|---|---|---|
| 10° C | 50° F | 10° C | 50° F | 49 | 108 |
| 21° C | 70° F | 15° C | 60° F | 47 | 104 |

**2 Years Warranty**
subject to limitations

### ▶ Certifications available for this model


BREMA ICE MAKERS SPA
Via dell'Industria 10,
20020 Villa Cortese (MI), Italy
tel. +39 0331 434811
fax +39 0331 433833
www.bremaice.it
info@bremaice.it


Bim + Data download | Installation | We are Brema



Ice Cube

# CB 425

BREMA Ice Makers

## Undercounter ice maker up to 49 kg - Sprayer system

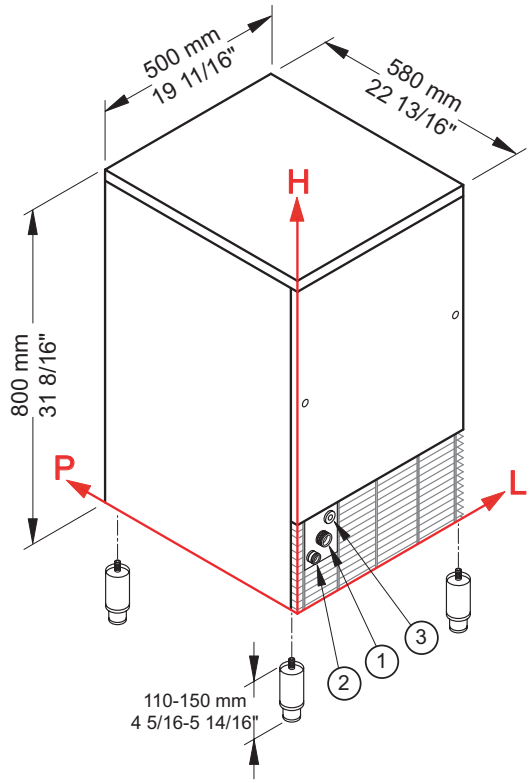


### ▶ Working conditions

- Location: **Indoor**

| | Min | Max |
|---|---|---|
| Ambient temperature | +10° C / +50° F | +43° C / 110° F |
| Water temperature | +3° C / +37° F | +32° C / +90° F |
| Voltage | -10% | +10% |
| Water inlet pressure | 1bar (14 psi) | 6bar (84 psi) |

### ▶ Performances

| Air temperature | Water temperature 10° C | 50° F | 15° C | 60° F | 21° C | 70° F |
|---|---|---|---|---|---|---|
| 10° C | 49 kg | | | | | |
| 50° F | | 108 lbs | | | | |
| 21° C | | | 47 kg | | | |
| 70° F | | | | 104 lbs | | |
| 32° C | | | | | 40 kg | |
| 90° F | | | | | | 88 lbs |

### ▶ Connections

All measures are referred to the rear bottom-left corner (L-H-Ø)

① Water in.: 111 mm / 4 6/16" - 196 mm / 7 11/16" - 3/4"
② Water out.: 49 mm / 1 15/16" - 151 mm / 5 15/16" - 24 mm / 15/16"
③ Electrical connections: 156 mm / 6 2/16" - 232 mm / 9 2/16"

### ▶ Technical information

| | |
|---|---|
| Production in 24h | 47 kg / 104 lbs |
| Store capacity, up to | 25 kg / 55 lbs |
| Cooling system | A - W |
| Kind of cube | A-18g, C-33g, D-13g, E-42g |
| Refrigerant | R404A |
| Standard voltage | 220-240 V ~ 50 Hz |
| Electrical consumption | 500 W |
| Fuse | 10 A |
| Finish | AISI 304 stainless steel, scotch brite |

| | |
|---|---|
| Water consumption | A: 4 l/kg - 47,9 gal/100 lbs |
| | W: 14 l/kg - 167,8 gal/100 lbs |
| Sizes (L-P-H mm) | 500 - 580 - 800 |
| (L-P-H in) | 19 11/16 - 22 13/16 - 31 8/16 |
| Sizes with pack (L-P-H mm) | 550 - 630 - 990 |
| (L-P-H in) | 21 10/16 - 24 13/16 - 39 |
| Net weight | 56 kg / 123 lbs |
| Gross weight | 64 kg / 141 lbs |

All the technical information must be considered at the following conditions:
Sizes without feet
Standard Cube (18 g)
Ambient temperature +21° C
Water temperature +15° C
Electrical consumption at +43° C (standard voltage)

**Models and specifications are subject to change without notice**

Rev. 01 - Issued January 2016

BREMA Ice Makers

BREMA ICE MAKERS SPA
Via dell'Industria 10,
20020 Villa Cortese (MI), Italy
tel. +39 0331 434811
fax +39 0331 433833
www.bremaice.it
info@bremaice.it

Bim + Data download | Installation | We are Brema