fimar

SPARE PARTS
TAVOLA RICAMBI

im25-38cns-fn
0

SPEC.		N.	CODE	DENOMINAZIONE - DENOMINATION	PRICE
(38FN-CNS)		1	SL0062	Cover - Coperchio	€ 13.00
(25FN-CNS)		1	SL3334	Cover - Coperchio	€ 11.00
Timer digitale (25FN-CNS)		1	SL4144	Cover - Coperchio	€ 36.00
Timer digitale (38FN-CNS)		1	SL4145	Cover - Coperchio	€ 73.00
		2	SL0076	Pivot - Perno	€ 5.00
01/04/07 f.p.(*) (38FN-CNS)		3	SL2684	Chain - Catena	
1/2"x5/16" (25FN-CNS)	*	3	SL3365	Chain - Catena	€ 5.00
1/2"x5/16" (38FN-CNS)	*	3	SL3438	Chain - Catena	€ 7.50
a matr. 151102948 f.p.(*)		4	SL3264	Spacer - Distanziale	€ 2.50
da matr. 151102949 13/11/15		4	SL4256	Spacer - Distanziale	€ 4.00
6205 2RS a matr.151102948 f.p.(*)		5	SL0118	Bearing - Cuscinetto	€ 8.00
6304 2RS da matr.151102949		5	SL3194	Bearing - Cuscinetto	€ 10.50
6005 2RS		6	SL0241	Bearing - Cuscinetto	
		7	SL3261	Support - Supporto	€ 14.00
		8	SL0035	Stop - Battuta	€ 5.00
		9	SL0036	Cam - Camma	€ 3.00
CE norms da matr.190503100	*	10	SA1158	Microswitch - Microinterruttore	€ 14.00
EXCE norms, 1Ph		10	SL2701	Microswitch - Microinterruttore	€ 18.50
EXCE norms, 3Ph da matr.191105456		10	SL4409	Microswitch - Microinterruttore	€ 19.50
1/2"x5/16" Z=29		12	SL0084	Pinion - Pignone	€ 15.20
UCF205		13	SL0086	Support - Supporto	€ 9.50
01/04/07 f.p.(*) (38FN-CNS)		14	SL2606	Cover - Coperchio	
(25FN-CNS)		14	SL3335	Cover - Coperchio	€ 8.50
(38FN-CNS)		14	SL3441	Cover - Coperchio	
400V/3Ph/50Hz	*	15	SA1210	Electric installation - Impianto elettrico	€ 55.00
230V/1Ph/50Hz	*	15	SA1220	Electric installation - Impianto elettrico	€ 56.00
230V/1Ph/50Hz timer dig. (25-38)	*	15	SL0987	Electric installation - Impianto elettrico	
400V/3Ph/50Hz timer dig. (25-38)	*	15	SL0988	Electric installation - Impianto elettrico	€ 52.40
(38FN-CNS)		16	SL2849	Cover - Coperchio	
(25FN-CNS)		16	SL3367	Cover - Coperchio	€ 16.00
a matr151102948 f.p.(*) 12/11/15		17	SL3265	Pinion - Pignone	€ 7.00
1/2"x5/16" Z=15 matr.151102948		17	SL4255	Pinion - Pignone	€ 7.70
6x6x25		18	SL1056	Key - Linguetta	€ 1.00
8x7x40		19	SL3410	Key - Linguetta	€ 1.50
		20	SA1024	Shaft - Albero	€ 27.55
01/04/07 f.p.(*) (38FN-CNS)		20	SA1025	Shaft - Albero	€ 34.00
		21	SL3338	Gear box - Riduttore	€ 182.00
230V/1Ph/50Hz		22	SL3214	Motor - Motore	€ 150.00
400V/3Ph/50Hz		22	SL3311	Motor - Motore	€ 130.00

*Ricambio consigliato - Advised spare parts

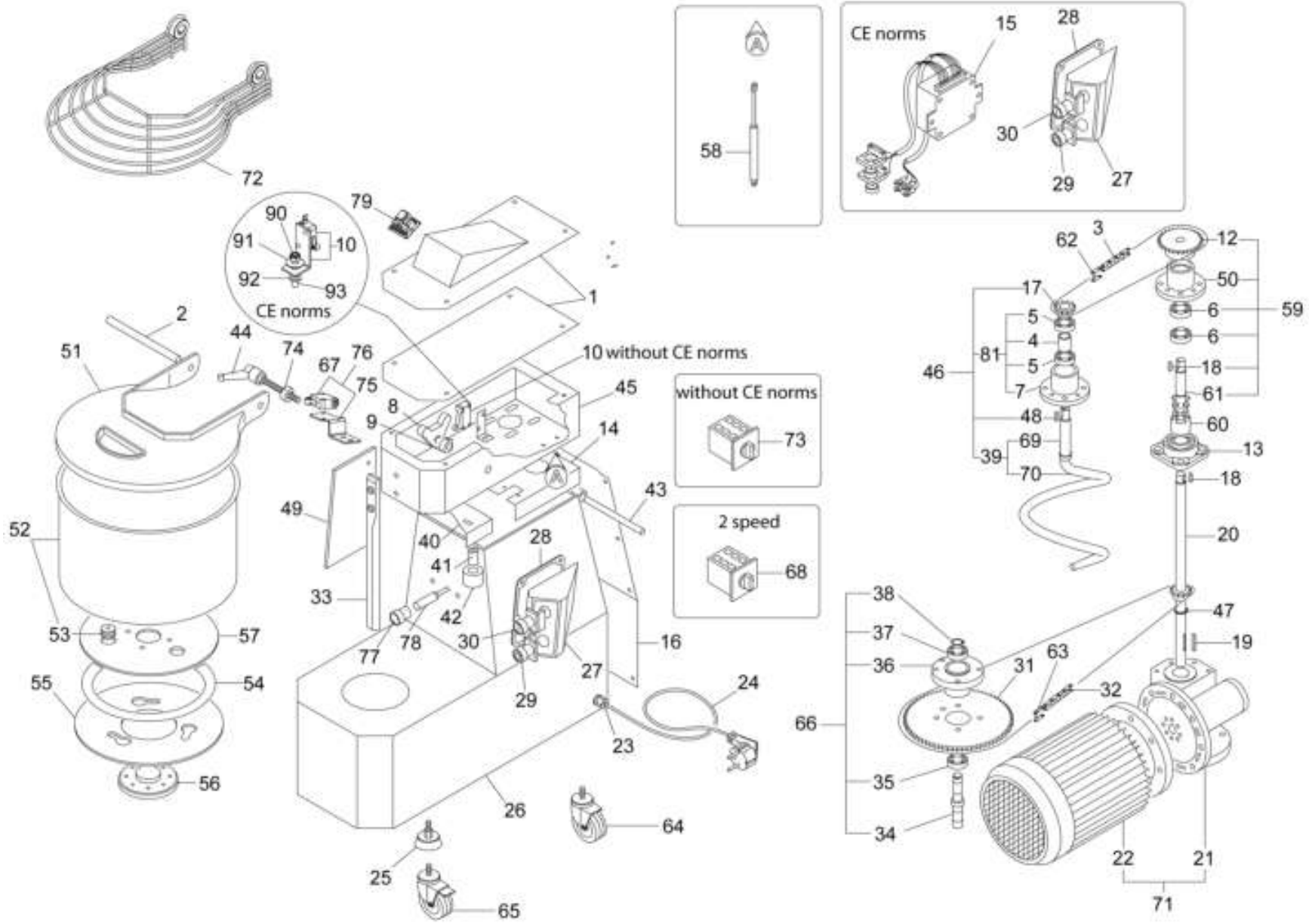

POS.	CODE
1	SL0062
1	SL3334
1	SL4144
1	SL4145
2	SL0076
3	SL2684
3	SL3365
3	SL3438
4	SL3264
4	SL4256
5	SL0118
5	SL3194
6	SL0241
7	SL3261
8	SL0035
9	SL0036
10	SA1158
10	SL2701
10	SL4409
12	SL0084
13	SL0086
14	SL2606
14	SL3335
14	SL3441
15	SA1210
15	SA1220
15	SL0987
15	SL0988
16	SL2849
16	SL3367
17	SL3265
17	SL4255
18	SL1056
19	SL3410
20	SA1024
20	SA1025
21	SL3338
22	SL3214
22	SL3311

SPEC.		N.	CODE	DENOMINAZIONE - DENOMINATION	PRICE
400V/3Ph/50Hz (2 speed)		22	SL3315	Motor - Motore	€ 240.00
PG11		23	SL1668	Cable clamp - Pressacavo	€ 1.00
1Ph+N+Gnd		24	SL1671	Electric cable - Cavo elettrico	€ 6.50
3Ph+Gnd		24	SL1841	Electric cable - Cavo elettrico	€ 12.00
	*	25	SL3361	Foot - Piedino	€ 4.25
(25FN-CNS)		26	SL3332	Base - Base	
01/04/07 f.p.(*) (38FN-CNS)		26	SL3359	Base - Base	
(38FN-CNS)		26	SL3437	Base - Base	
		27	SL0937	Box - Scatola	€ 3.50
		28	SL0396	Gasket - Guarnizione	€ 4.80
Stop	*	29	SL0807	Push button - Pulsante	€ 12.00
Start	*	30	SL1049	Push button - Pulsante	€ 12.00
3/8"x7/32" Z=85		31	SL0100	Crown - Corona	€ 18.00
01/04/07 f.p.(*) (38FN-CNS)	*	32	SL2686	Chain - Catena	
3/8"x7/32"	*	32	SL3366	Chain - Catena	€ 10.00
		33	SL3371	Rod - Asta	€ 27.00
		34	SL0072	Shaft - Albero	€ 6.50
6004 ZZ		35	SL0073	Bearing - Cuscinetto	
		36	SL0074	Support - Supporto	€ 28.80
3204		37	SL0103	Bearing - Cuscinetto	€ 12.00
ø20		38	SL0075	Seeger - Seeger	€ 0.50
a matr. 151102948 f.p.(*)		39	SA1030	Spiral - Spirale	€ 81.00
da matr. 151102949 13/11/15	*	39	SL3262	Spiral - Spirale	€ 70.00
(25FN-CNS)		40	SL2604	Bracket - Staffa	
(38FN-CNS)		40	SL2605	Bracket - Staffa	
		41	SL1090	Spacer - Distanziale	€ 2.50
	*	42	SL2655	Wheel - Ruota	€ 1.80
		43	SL2625	Pivot - Perno	€ 5.00
	*	44	SL2630	Lever - Leva	€ 6.00
01/04/07 f.p.(*) (38FN-CNS)		45	SL2577	Head - Testata	
(25FN-CNS)		45	SL3333	Head - Testata	€ 60.00
(38FN-CNS)		45	SL3435	Head - Testata	€ 58.00
da matr. 151102949 13/11/15		46	SA1129	Support - Supporto	€ 88.00
Ø25		47	SL1616	Seeger - Seeger	€ 0.50
8x7x18		48	SL3408	Key - Linguetta	€ 1.00
(25FN-CNS)		49	SL4112	Protection - Protezione	€ 12.00
(38FN-CNS)		49	SL4113	Protection - Protezione	€ 12.00
		50	SL2627	Support - Supporto	€ 13.00
Plastic (25FN-CNS)		51	SA1006	Cover - Coperchio	€ 20.00
Plastic (38FN-CNS)		51	SA1007	Cover - Coperchio	€ 22.00

*Ricambio consigliato - Advised spare parts

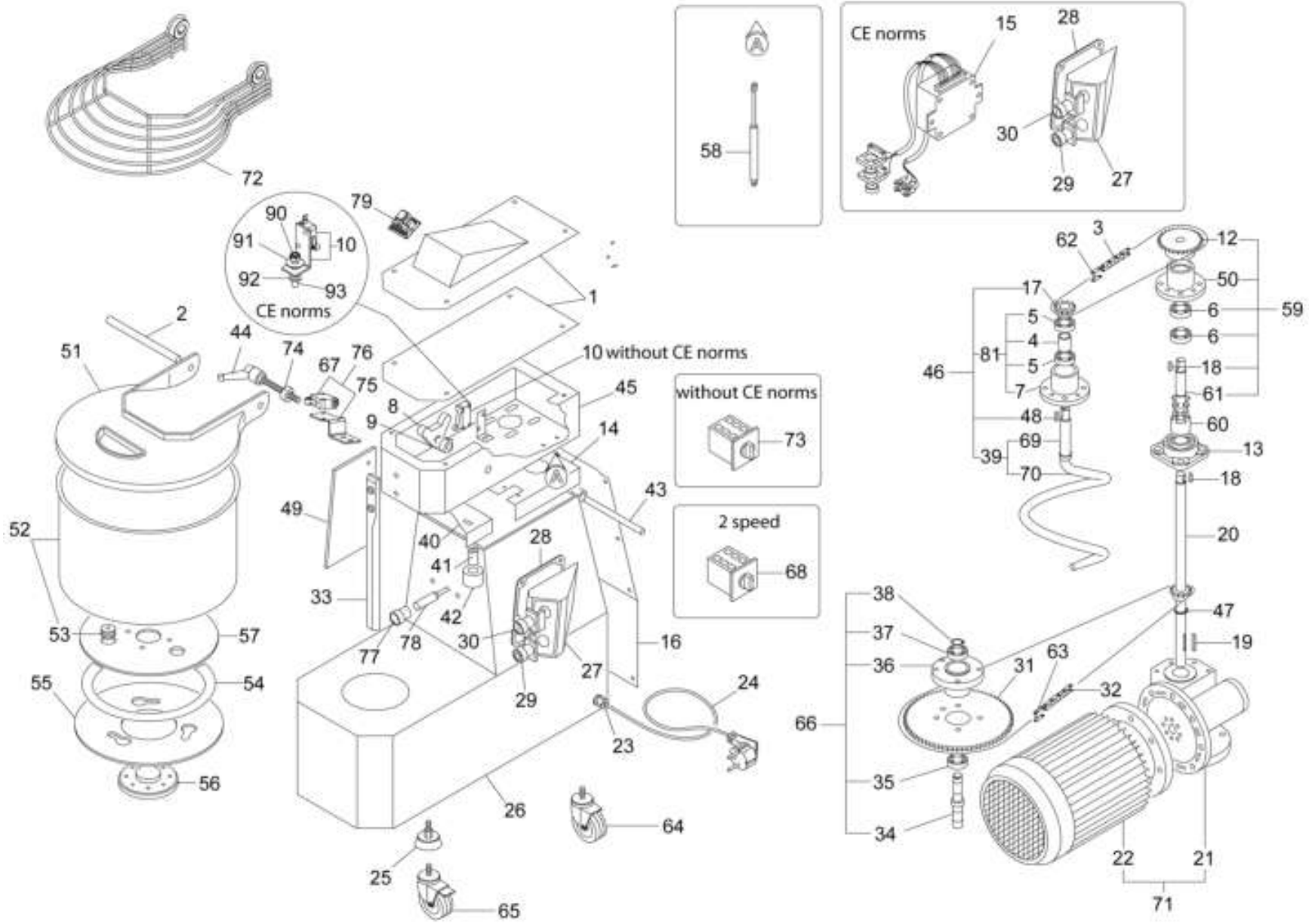

POS.	CODE
22	SL3315
23	SL1668
24	SL1671
24	SL1841
25	SL3361
26	SL3332
26	SL3359
26	SL3437
27	SL0937
28	SL0396
29	SL0807
30	SL1049
31	SL0100
32	SL2686
32	SL3366
33	SL3371
34	SL0072
35	SL0073
36	SL0074
37	SL0103
38	SL0075
39	SA1030
39	SL3262
40	SL2604
40	SL2605
41	SL1090
42	SL2655
43	SL2625
44	SL2630
45	SL2577
45	SL3333
45	SL3435
46	SA1129
47	SL1616
48	SL3408
49	SL4112
49	SL4113
50	SL2627
51	SA1006
51	SA1007

fimar

SPARE PARTS
TAVOLA RICAMBI

im25-38cns-fn
0

SPEC.	N.	CODE	DENOMINAZIONE - DENOMINATION	PRICE
(25CNS) Assembly	52	SA1170	Pan - Pentola	€ 104.00
(38CNS) Assembly	52	SA1180	Pan - Pentola	€ 146.00
(25FN)	52	SL0067	Pan - Pentola	€ 125.00
(38FN)	52	SL0068	Pan - Pentola	€ 135.00
(25-38CNS)	53	SL2623	Pivot - Perno	€ 7.50
(25CNS)	54	SL1034	Gasket - Guarnizione	€ 16.00
(38CNS)	54	SL1334	Gasket - Guarnizione	€ 19.50
(38CNS)	55	SL2634	Flange - Flangia	€ 40.00
(25CNS)	55	SL2637	Flange - Flangia	€ 36.00
(25-38CNS)	56	SL2621	Flange - Flangia	€ 31.70
(25-38FN)	56	SL2867	Flange - Flangia	
(25-38CNS)	57	SL2636	Flange - Flangia	€ 30.00
	58	SL2668	Spring - Molla	€ 17.50
Assembly	59	SA1047	Support - Supporto	€ 46.00
	60	SL3206	Joint - Giunto	€ 27.20
	61	SL3204	Shaft - Albero	€ 13.00
1/2"x5/16"	62	SL1632	Joint - Giunto	€ 1.50
3/8"x7/32"	63	SL1629	Joint - Giunto	€ 2.50
ø95 M10x30	64	SL3482	Fixed wheel - Ruota fissa	€ 8.00
ø95 M10x30	65	SL3483	Revolving wheel - Ruota girevole	€ 11.00
Assembly	66	SA1800	Support - Supporto	€ 40.00
CE norms IN 07/12	* 67	SL0885	Microswitch - Microinterruttore	€ 8.00
CE norms 07/12 f.p.(*)	67	SL1401	Microswitch - Microinterruttore	€ 11.00
2 speed (CE norms)	68	SL2743	Speed changeover switch - Commutatore di velocità	€ 49.00
2 speed (without CE norms)	68	SL3760	Speed changeover switch - Commutatore di velocità	€ 40.00
a matr.151102948 f.p.(*)	69	SL3266	Shaft - Albero	
a matr.151102948 f.p.(*)	70	SL0069	Spiral - Spirale	€ 80.00
400V/3Ph/50Hz	71	SL3404	Geared motor - Motoriduttore	€ 260.00
230V/1Ph/50Hz	71	SL3405	Geared motor - Motoriduttore	€ 290.00
400V/3Ph/50Hz (2 speed)	71	SL3406	Geared motor - Motoriduttore	€ 318.00
Stainless steel (25FN-CNS)	72	SL3419	Cover - Coperchio	€ 53.00
Stainless steel (38FN-CNS)	72	SL3420	Cover - Coperchio	€ 55.00
	* 73	SL0054	Switch - Interruttore	€ 17.35
	74	SL4090	Cam - Camma	€ 8.70
	75	SL4089	Bracket - Staffa	€ 4.50
Assembly	* 76	SA1140	Microswitch - Microinterruttore	€ 15.00
(25CNS)	77	SL4119	Protection - Protezione	€ 9.80
(38CNS)	77	SL4120	Protection - Protezione	
(25-38CNS) Pentola	* 78	SL4103	Probe - Sonda	€ 26.70
Timer digitale	79	SL4116	Electronic card - Scheda elettronica	€ 27.30

*Ricambio consigliato - Advised spare parts

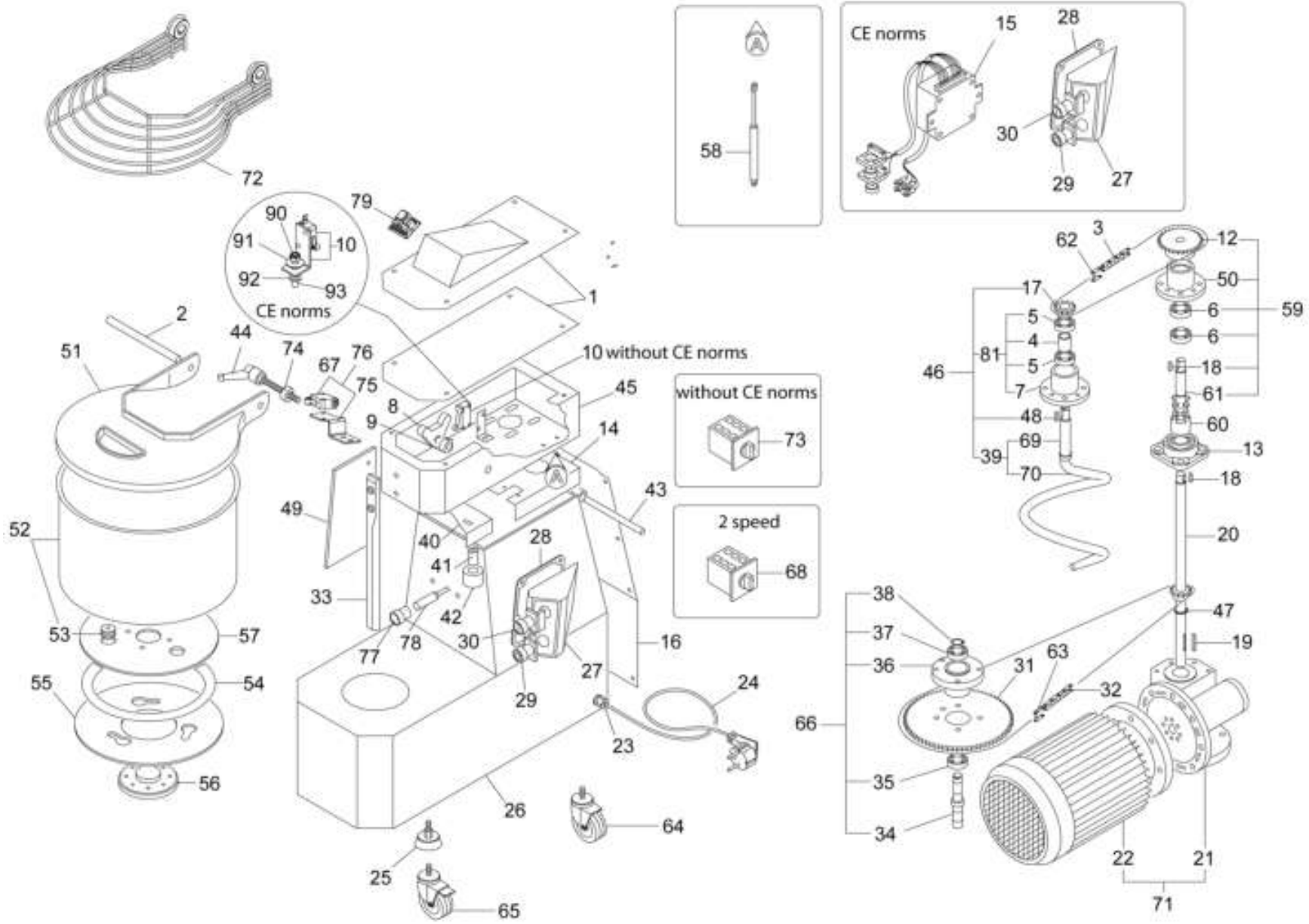

POS.	CODE
52	SA1170
52	SA1180
52	SL0067
52	SL0068
53	SL2623
54	SL1034
54	SL1334
55	SL2634
55	SL2637
56	SL2621
56	SL2867
57	SL2636
58	SL2668
59	SA1047
60	SL3206
61	SL3204
62	SL1632
63	SL1629
64	SL3482
65	SL3483
66	SA1800
67	SL0885
67	SL1401
68	SL2743
68	SL3760
69	SL3266
70	SL0069
71	SL3404
71	SL3405
71	SL3406
72	SL3419
72	SL3420
73	SL0054
74	SL4090
75	SL4089
76	SA1140
77	SL4119
77	SL4120
78	SL4103
79	SL4116

SPEC.	N.	CODE	DENOMINAZIONE - DENOMINATION	PRICE
Timer digitale	**80**	**SL4125**	**Label - Etichetta**	
fino matr.151102948 f.p.(*)	**81**	**SA1029**	**Support - Supporto**	**€ 29.00**
CE norms	**90**	**3113200**	**NUT - DADO**	
CE norms	**91**	**SL6495**	**WASHER - ROSETTA**	
CE norms fino a matr.190503100	**92**	**SL2062**	**WASHER - ROSETTA**	
CE norms fino a matr.190503100	**93**	**SL6484**	**DOWEL - GRANO**	

*Ricambio consigliato - Advised spare parts

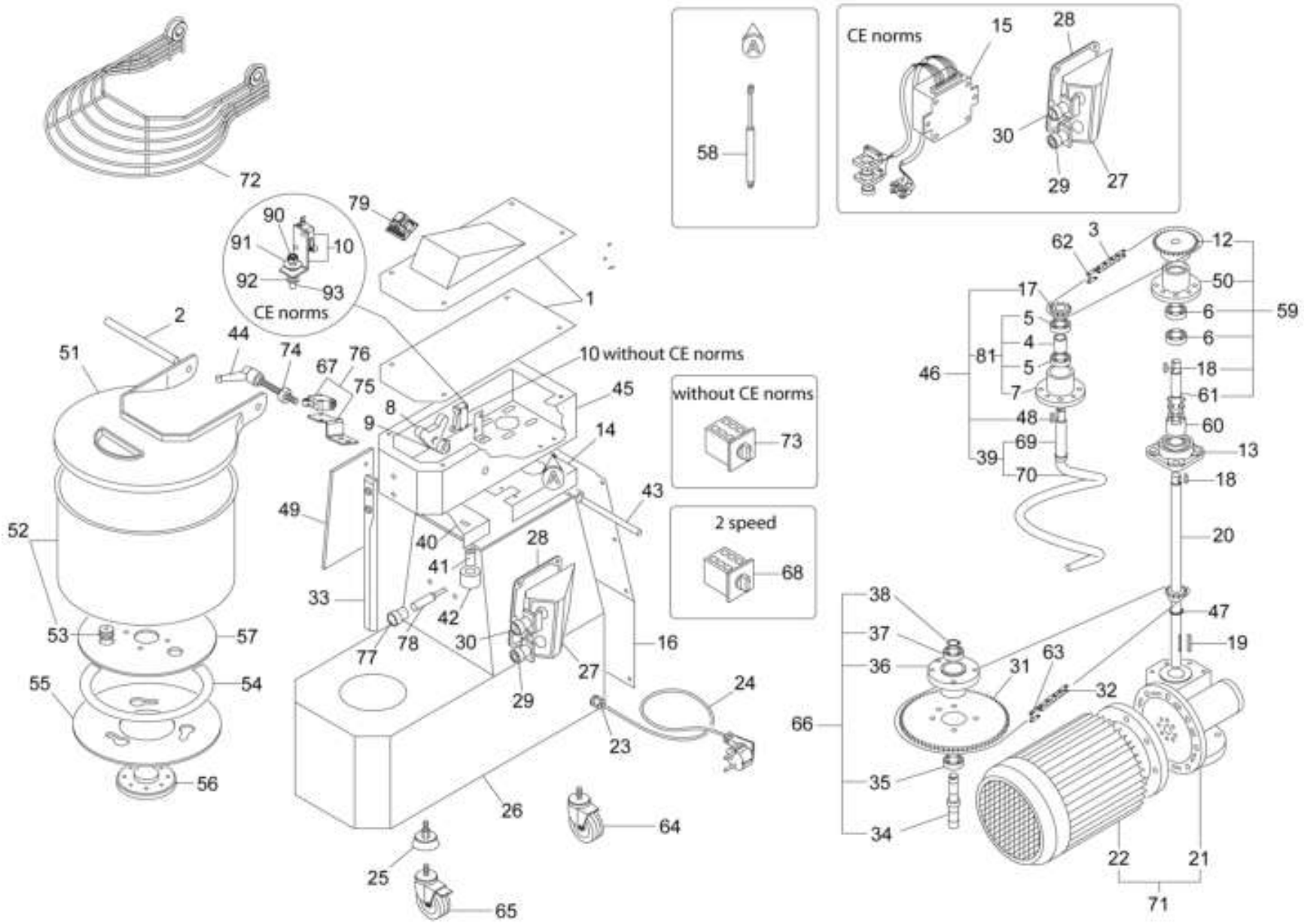

POS.	CODE
80	SL4125
81	SA1029
90	3113200
91	SL6495
92	SL2062
93	SL6484